The Woodworker's Journal

Vol. 14, No. 2 $3.95

0 73361 64856 3 03

Included in this issue: **Toddler Cart • Folk Fiddle • Plant Stand Hourglass • Candle Holder • Shop-Built Sanding Blocks Cookie Jar Holder • Small Early American Mirror**

March/April 1990

Professional Quality Woodworking Machines At Affordable Prices

ORDER TOLL FREE 1-800-288-7297 Extention 90

Super 15" Scroll Saw

On Sale ... **$119.95**
(Includes $52 ***FREE*** Accessories)

Cut intricate wood patterns with this versatile machine.

FEATURES:

- **Parallel rocker arm cutting system** - eliminates blade breakage & sanding.
- **E-Z set blade change system** - permenant, easy to use upper arm blade holders.
- **FREE Accessories** - 1 dz blades, extra blade holders, E-Z set system, Plastic lettering guide set .. $ 52 Value

SPECIFICATIONS:

• Cast iron construction • 15" throat • Motor: 1/8 HP, TEFC, 1650 RPM, 110V, UL Listed • 3/4" stroke • 2" depth of cut • Table tilts to 45º • 43 Lbs.

Item #SAW .....$119.95 (UPS $10)

Scroll Saw Accessories

Dust Blower
Installs between lower arm and base - keeps your pattern line visible at all times. Installation instructions included.
#BKT .... $15.00/Kit (•)

Saw Stand *(On Sale)*
Suitable for Super 15" Scroll Saw or #S46 Sander. 37" High - perfect height & a great convenience.
#STD ... (Reg $39)
On Sale **.. $26**

(UPS $4.00)

Neptune 1-1/2" Lettering Guides

(**Free** w/purchase of Saw). Includes upper & lower case alphabet + numbers + free patterns. **#LN1** ..... **$12**/set (•)

"E-Z Set" Blade Holder System
(**Free** w/purchase of Saw). Clamps any blade (to "000" size) easily into these pivoting blade holders mounted permanently on saw arms. **Simplifies re-attaching blades** when making internal cuts. Simple installation.
Item **#RET** .....**$15**/kit (•)

Magnifier Lamp
Great for magnifying scroll work or closeup work of any kind.

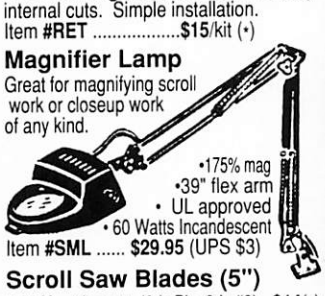

•175% mag
•39" flex arm
• UL approved
• 60 Watts Incandescent
Item **#SML** ..... **$29.95** (UPS $3)

Scroll Saw Blades (5")
#BPK - 4dz asst. (2dz Pin, 2dz #9)...**$14**(•)
#BPS - 2dz Spiral blades (size #2)...**$10**(•)

Super 125 Planer

On Sale *$339.95*

This machine will pay for itself time and again by planing your own wood. Finishes wood like machines many times its price.

FEATURES:

• **Portable** at 65 lbs • **Power feed** •12 1/2" wide High Speed Steel Knives Shipped assembled and ready to run.

SPECIFICATIONS:

Motor: 16Amp, 115V, 8000RPM, 2HP• 26.2 fpm auto feed rate • 16,000 Cuts/min • Thickness of stock: 3/16" - 6" • 3/16" Max depth of cut • 2 HSS knives

Item #PLA .....*$339.95* (UPS $15)

Planer Accessories

Free *plans for roller stand with purchase of rollers*

Extra Set of 2 Knives
High Speed steel, 12-1/2" long.
Item #PKN .....$25.00/set (•)

Dust Chute
For vacuum takeoff of wood chips.
#PDS ..(reg $24), **On Sale....$15** (UPS $3)

Planer Stand (Heavy duty)
Drilled for Super 125 Planer. 27-1/4"High.
#PST ...(Reg $44), **On Sale...$39/ea** (UPS $6)

Roller Stand
HTC brand support stand w/heavy duty ball bearing roller. Height adjusts from 25" - 44".
#PRS ...(reg $40), **On Sale** ...**$35** (UPS $4)

Ball Bearing Rollers
(Minimum purchase 2 rollers). Build a roller stand, infeed/outfeed table etc. with these 13" X 2" Heavy Duty rollers. Purchase includes **FREE** plans for roller stand shown above.
Item **#BBR** ..... **$6.50/ea** ($3 UPS /order)

Penn State's Commitment

We unconditionally guarantee your satisfaction with our fine machines. All of our machines carry a Thirty day Money Back Guarantee and One year Warranty for Parts and Labor

Wood Lathe XL- 40

Reg $299.95 ... **On Sale $249.95** (UPS $20)
Includes ***FREE*** 8 piece Wood Chisel Set ... **$34 Value**

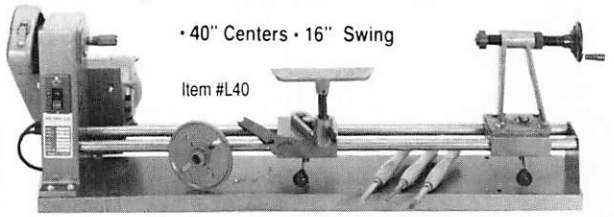

Our new XL-40 Wood Lathe surpasses every lathe in its price range with quality & features you would expect from machines many times its price.

FEATURES:

Heavy Duty cast iron construction provides smooth turning action • **40" Centers • 16" Swing** for turning larger bowls • Smooth toolrest movement on 1" solid steel rails • **"Live" center** on tailstock • **Motor mounted for easy positioning** and belt changes • **Sturdy 52" steel base** mounts on table top or optional stand.

PURCHASE INCLUDES:

• Lathe with Motor & Base • Toolrest
• 6" Faceplate • 8 pc wood turning chisel set

SPECIFICATIONS:

• MOTOR: 1720 RPM, 1/2HP, 8AMP, 110V
• 3 SPEEDS: 660, 1500, 2850 RPM • Overall length - 60" • Weight - 100lbs

Item **# L40** .....***On Sale*** **$249.95** (UPS $20)

Lathe Accessories

XL-40 Lathe Stand
Heavy duty. Wt. 25Lbs
Size: 28"H X 56"L X 21" W
Item **#LST ..... $59/ea** (UPS $6)

4 Jaw Wood Chuck
This 6" chuck has 4 independent jaws for holding odd or square shaped work. Jaws can be reversed for inside chucking.
#L4J ..**$49** (•)

8 Piece Wood Chisel Set
(***FREE*** **w/purchase of XL-40 Lathe).** Forged from high carbon steel. Includes 3 gouges, 2 skews, 1 round nose. 1 parting tool and 1 spearpoint.
#LCS ...$34 /set (•)

Two way 4"x6" Sander

On Sale ... **$109.95** (UPS $8)
(Includes **$10 FREE** Belts & Discs)

Item #S46

Here's a machine that adds true versatility to your shop.

FEATURES & SPECIFICATIONS

Uses **universally available** 6" discs, 4" x 36" belts • Includes Assortment Of 3 Belts, 4 Discs Of Various Grits • **Built in Dust Collection** outlet • Aluminum table: tilts to allow bevel sanding to 45º, includes mitre gauge, removable for use with both disc and belt • Belt tilts/locks to any position from horizontal to vertical • **Quick release lever** for changing belts • **Single action tracking** adjustment • Motor 1/3HP, 1720RPM, 115V • Weight - 40Lbs

DC-1 Dust Collector

(Includes $15 ***FREE*** Hose & Fittings)
On Sale .. **$189.95**
(UPS $20)

Item# **DC1**

Keep your shop clean and safe from saw dust with this large capacity, commercial style system.

SPECIFICATIONS:

1HP • 110/220V (pre-wired 110V) • 610 CFM air flow • 2ea 20 gal bags • 4" inlet • Castors on base • WT - 75 lbs

FREE **With Purchase ($15 Value)**
Dust collection hose • 4" to 3" rigid adaptor • 4" to 2" flex adaptor • Plans for 2 stage setup • Sources for accessories

PENN STATE INDUSTRIES - J

2850 Comly Road • Phila, Pa 19154

Order Toll Free **1-800-288-7297 (Ext 90)** Information 1-215-676-7609 (ext 15)
Visa, Master, & Discover Card accepted Pa residents add 6% Sales Tax
When ordering - Add UPS Shipping Charges as noted
(•) No charge for accessories ordered with a machine, add $3 if ordered separately. UPS charges are for Continental U.S. only (Call for shipping charges to other locations)

The Woodworker's Journal

MARCH/APRIL 1990 VOLUME 14, NUMBER 2

CONTENTS

Editor and Publisher **James J. McQuillan**

Managing Editor **Thomas G. Begnal**

Associate Editors
Thomas Clark, David F. Peters

Contributing Editor **Jim Barrett**

Art Director **Dan Thornton**
Associate Art Director **Michael Gellatly**
Technical Illustrator **Martin J. Castagna**
Production Manager **Jane Manley**

Designer/Craftsman **Mark J. Ziobro**

Circulation/Promotion Manager **Lynne Streeter**
Subscriptions
JoAnne Finkle, Maureen Murphy-Gereg
Distribution **Patricia Malumphy**

Computer Operations Supervisor **Kathy Shook**

Office
Manager **Patricia McLean**
Assistant **Lynda Morris**
Administrative Assitant **Marie McQuillan**

Advertising Manager **Kimberly Gellatly**

Advertising Sales
Dan Ramage, Carolyn Ray, Michael Claffey
Pattis/3M
7161 North Cicero Avenue
Lincolnwood, IL 60646
Tel. (708) 679-1100
Fax (708) 679-5926

The Woodworker's Journal (ISSN 0199-1892) is published bi-monthly in January, March, May, July, September and November by The Madrigal Publishing Co., Inc., P.O. Box 1629, New Milford, CT 06776. Telephone: (203) 355-2694.

Copyright 1990 by The Madrigal Publishing Co., Inc. No part of this publication may be reproduced by any method without permission from the publisher.

Second class postage paid at New Milford, CT 06776 and additional offices.

Subscription Rates: In the United States and its possessions — One year (6 issues) $17.95, Two years (12 issues) $31.90. Canada — One year $25.95 (CAD), Two years $44.95 (CAD). Foreign countries — One year $25.00 (USD), Two years $44.00 (USD).

To subscribe, Renew or Change Address: Write to **The Woodworker's Journal,** P.O. Box 1629, New Milford, CT 06776, including mailing label for renewals and changes. For gift subscriptions, include your own name and address as well as those of gift recipients.

Postmaster: Send Change of Address to **The Woodworker's Journal,** P.O. Box 1629, New Milford, CT 06776.

Contributions: We welcome contributions in the form of manuscripts, drawings and photographs and will be glad to consider such for possible publication. Contributors should include a stamped, self-addressed envelope of suitable size with each submission. While we cannot assume responsibility for loss or damage, all materials will be treated with care while in our possession. Payment for the use of unsolicited material will be made upon acceptance. Address all contributions to: *Editor,* **The Woodworker's Journal,** P.O. Box 1629, New Milford, CT 06776.

U.S.A. Newsstand Distribution by Eastern News Distributors, Inc., 1130 Cleveland Rd., Sandusky, OH 44870.

Photo Credits: ***John Kane/Silver Sun Studios,*** *Cover and pp. 3, 32, 38, 42, 44, 48, 51, 58.* ***R. J. De Cristoforo,*** *pp. 20-24. Cover photographed at The Silo, New Milford, CT; props courtesy of J. Seitz & Co., New Preston, CT*

DEPARTMENTS

4 Shoptalk

6 Letters

8 Events

9 Readers' Information Exchange

10 Product News

11 Cabinetmakers' Supplies
Furniture Kit Suppliers

16 Woodworking Basics
Making Drawers

20 In The Shop
Using Router Bits in the Drill Press

25 Finishing
Finishing Outdoor Projects

30 Special Techniques
Making Curved Instrument Sides

42 Gift Shop

66 Shop Tips

FEATURE

12 Woodworker Profile
A Conversation with Allene and Harold Westover

PROJECTS

32 Santa Fe Bench

38 Small Early American Mirror

40 Shop-Built Sanding Blocks

42 Cookie Jar Holder

44 Hourglass

46 Candle Holder

48 Toddler Cart

51 Folk Fiddle

58 Plant Stand

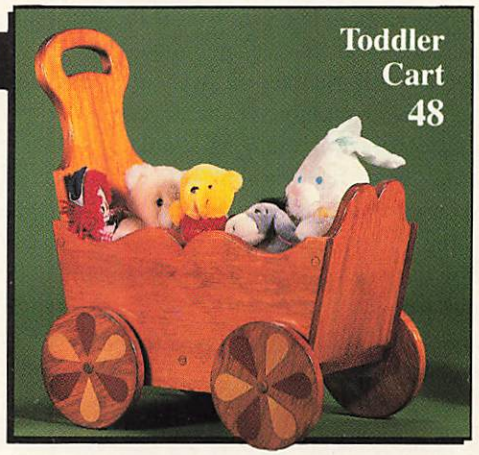

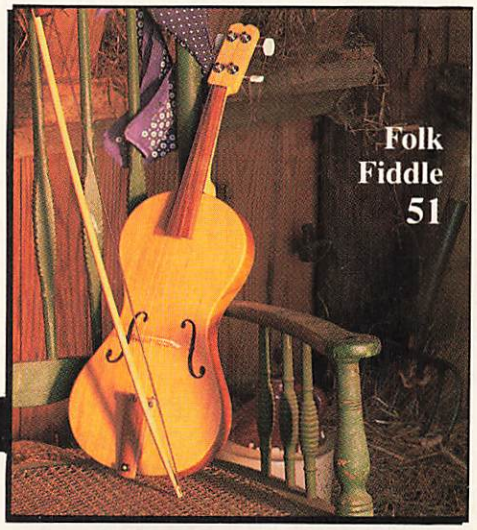

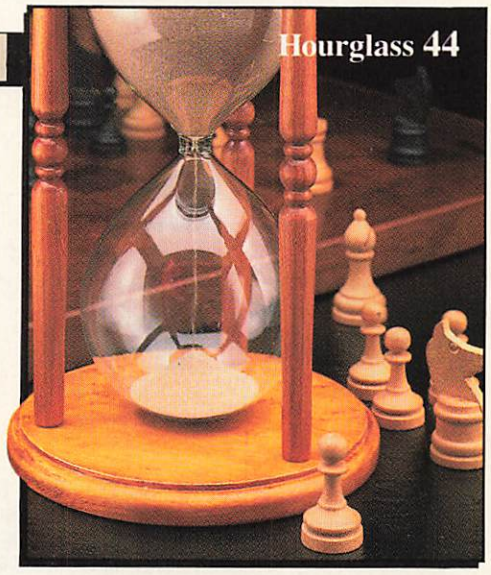

Shoptalk

Wild Wood

Wood as a medium for creativity is fascinating stuff. In fact, I think it's also a bit spooky. Long after the tree has been felled and cut up, the boards seem to retain a memory of the stresses imposed on the tree by wind, gravity, and the ever-changing cycle of seasons. It's almost as if the ghostly tree continues to haunt each piece of its dismembered form.

Boards will writhe and twist in a macabre dance done in extreme slow motion as they respond to changes in their moisture content. Then, too, when you alter their mass and internal structure by ripping them or planing off large amounts, their response to this "trauma" is immediate twisting or cupping.

You can see these things happening and I'm convinced that if our hearing were acute enough, we would also hear our boards sighing, creaking and rumbling like so many miniature humpback whales.

Like people, some woods are more docile than others, having grown under placid circumstances. Unfortunately, it's not always easy to spot the mavericks and maniacs in the lumberyard pile. These are the boards cut from tortured trees and when they dry out or you start messing with them, all sorts of wild things start happening.

If you must use stock which has been radically planed down or bandsawn, cut your dovetails, miters or whatever pretty quickly and get the boards joined squarely before they start acting crazy. If a board starts cupping, you can usually flatten it by laying a wet cloth along the concave side and going over it with a hot steam iron. Once it's flattened, though, you had better do your joinery pronto before the board starts warping again.

As the January/February '90 issue was going to press early in November, we received the sad news that our good friend Henry Diamond had passed away at the age of 93. A few years ago, we dedicated our 10th anniversary issue to Henry who had given us much encouragement and help in the early years of this publication.

Henry made his mark in this world as an architect, artist, furniture designer and woodworker. He was a thorough professional and earned a living in all of these disciplines.

It was our very good fortune to know him, to listen to his wonderful stories and learn from him. We will not be privileged to meet his likes again in this lifetime.

Jim McQuillan

Grizzly DOES IT AGAIN!

2 H.P. DUST COLLECTORS
MODEL G1029

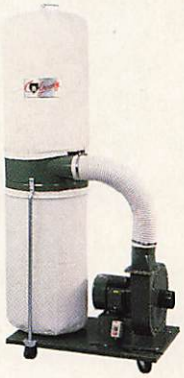

SUPER LOW PRICE $295.00
F.O.B. Bellingham, WA or Williamsport, PA
Clean up on the job!
Hoses and fittings available

6" x 47" HEAVY DUTY JOINTER
MODEL G1182

REG. $375.00
SALE PRICE $345.00
F.O.B. Bellingham, WA or Williamsport, PA

MOBILE BASE G1744
ONLY $89.95

THE INCREDIBLE "SHOPHELPER" ANTI-KICK DEVICE
ONLY $49.95
MODEL G1630
"YELLOW" SHOPHELPER

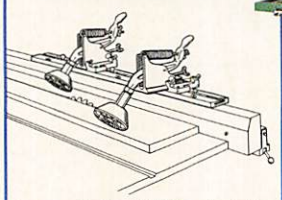

An excellent anti-kickback device that keeps work firmly up against the fence. (track optional)

Also Available:
MODEL G1766
"ORANGE" SHOPHELPER
FOR RADIAL-ARM SAWS
MODEL G1578
"GREEN" SHOPHELPER
FOR SHAPERS

10" HEAVY DUTY TABLESAW
MODEL G1022
REG. $365.00
SALE PRICE $355.00
F.O.B. Bellingham, WA or Williamsport, PA

MOBILE BASE G1739
ONLY $89.95

INCRA JIG
MODEL G1768

ONLY $28.50

INCRA JIG HANDBOOK & TEMPLATES

MODEL G1836
100 Illustrated pages and 17 templates with hundreds of possibilities.
ONLY $17.95

ASK FOR OUR FREE 1990 CATALOG TODAY!
West of the Mississippi orders
1-800-541-5537
Service — 206-647-0801
East of the Mississippi orders
1-800-523-4777
Service — 717-326-3806

90-104

MLCS Ltd.

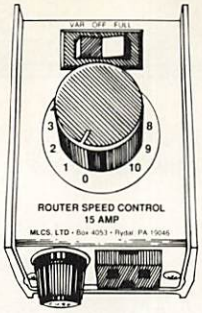

CONTROL THE SPEED OF YOUR ROUTER - ROUT AT THE SPEED THAT GIVES THE BEST RESULTS WITH THE WOOD AND BIT YOU ARE USING!

NOW ONLY **$39.95** Order Item #200

FEATURES:

- Speed Adjustable from Full Speed to 0 RPM
- Full Horsepower and Torque at All Speeds
- Go Back and Forth from Any Pre-Set Speed to Full Speed at the Flip of a Switch
- Works with All Routers 3 HP or Less
- 120V 15 Amp
- Gives Your Router a Feature Only Available on Routers Costing Hundreds of Dollars!
- *Less Tear Out*
- *Stops Burning*
- *Feed at Comfortable Rate*
- *Better, Safer Results with Large Diameter Bits*
- *Less Wear on Bits*
- *Less Noise and Softer Starts at Lower Speeds*

EASY TO USE - Simply plug in Speed Control and plug your router into the Speed Control - turn dial for best results. (Speed Control has a clip that can be worn on your belt or hung on wall or left loose.)

- Reduces speed electronically without reducing torque; electronic feed-back maintains speed by increasing voltage to motor as load increases.

CARBIDE TIPPED ROUTER BITS PROFESSIONAL PRODUCTION QUALITY *GUARANTEED*

WHEN ORDERING ANY THREE OR MORE DEDUCT $1.00 EACH. ALL PRICES ARE POSTAGE PAID

ITEM NO.	BEST CUT BEST PRICE	DESCRIPTION	ANGLE/DEPTH/RADIUS CIRCLE DIAMETER	LARGE DIA.	CUTTING LENGTH	SHANK SIZE	PRICE
#490		1¼" **Classical**		1¼"	⅝"	¼"	$22.50
#491		1½" Classical		1½"	¾"	¼"	$25.00
#792		1½" Classical		1½"	⅞"	½"	$25.00
#231		5/32" **Roman Ogee**	5/32" R	1¼"	15/32"	¼"	$17.00
#232		¼" Roman Ogee	¼" R	1½"	¾"	¼"	$18.00
#661		¼" Roman Ogee	¼" R	1½"	¾"	½"	$21.00
#340		⅛" **Cove**	⅛" R	⅝"	½"	¼"	$12.00
#341		¼" Cove	¼" R	1"	½"	¼"	$13.00
#342		⅜" Cove	⅜" R	1¼"	9/16"	¼"	$14.00
#343		½" Cove	½" R	1½"	⅝"	¼"	$15.00
#644		¾" Cove	¾" R	1⅞"	¾"	½"	$28.00
#350		⅛" **Round Over**	⅛" R	¾"	½"	¼"	$11.00
#351		3/16" Round Over	3/16" R	⅞"	½"	¼"	$11.00
#230		¼" Round Over	¼" R	1"	½"	¼"	$12.00
#354		⅜" Round Over	⅜" R	1¼"	⅝"	¼"	$15.50
#355		½" Round Over	½" R	1½"	¾"	¼"	$17.00
#656		¾" Round Over	¾" R	2"	⅞"	½"	$21.00
#657		1" Round Over	1" R	2½"	1"	½"	$33.00
#370		⅜" **Rabbeting**	⅜" Deep	1¼"	½"	¼"	$14.00
#670		⅜" Rabbeting	⅜" Deep	1¼"	½"	½"	$14.00
#366		⅛" **Slot Cutter**	⅜" Deep	1¼"	⅛"	¼"	$14.00
#368		¼" Slot Cutter	⅜" Deep	1¼"	¼"	¼"	$14.00
#403		⅜" **Dovetail**	9 degree	⅜"	⅜"	¼"	$ 7.50
#405		½" Dovetail	14 degree	½"	½"	¼"	$ 8.50
#409		¾" Dovetail	14 degree	¾"	⅞"	¼"	$10.50
#709		¾" Dovetail	14 degree	¾"	⅞"	½"	$10.50
#402		⅜" Dovetail	8 degree For	⅜"	½"	¼"	$12.00
#404		½" Dovetail	8 degree Leigh	½"	13/16"	¼"	$12.00
#708		11/16" Dovetail	8 degree Jigs	11/16"	1"	½"	$14.00

ITEM NO.	BEST CUT BEST PRICE	DESCRIPTION	ANGLE/DEPTH/RADIUS CIRCLE DIAMETER	LARGE DIA.	CUTTING LENGTH	SHANK SIZE	PRICE
#415		¼" **Core Box**	round nose	¼"	¼"	¼"	$10.00
#416		⅜" Core Box	round nose	⅜"	⅜"	¼"	$11.00
#417		½" Core Box	round nose	½"	11/32"	¼"	$14.00
#418		¾" Core Box	round nose	¾"	⅝"	¼"	$15.00
#719		1" Core Box	round nose	1"	¾"	½"	$18.00
#470		¼" **Straight**	plunge cutting	¼"	¾"	¼"	$ 7.00
#471		5/16" Straight	plunge cutting	5/16"	1"	¼"	$ 7.00
#472		⅜" Straight	plunge cutting	⅜"	1"	¼"	$ 7.00
#474		½" Straight	plunge cutting	½"	1"	¼"	$ 7.00
#775		½" Straight	plunge cutting	½"	2"	½"	$14.00
#476		9/16" Straight	plunge cutting	9/16"	1"	¼"	$ 7.00
#478		⅝" Straight	plunge cutting	⅝"	1"	¼"	$ 8.00
#479		¾" Straight	plunge cutting	¾"	1"	¼"	$10.00
#781		1" Straight	plunge cutting	1"	1½"	½"	$12.00
#500		⅜" **Flush**	**Trimming**	⅜"	½"	¼"	$ 7.00
#502		½" Flush	Trimming	½"	½"	¼"	$ 7.50
#503		½" Flush	Trimming	½"	1"	¼"	$ 8.50
#804		½" Flush	Trimming	½"	13/16"	½"	$ 9.00
#545		**Tongue & Groove**	Straight	15/8"	1"	¼"	$29.00
#845		Tongue & Groove	Straight	15/8"	1"	½"	$29.00
#546		Tongue & Groove	Wedge	13/16"	1"	¼"	$29.00
#846		Tongue & Groove	Wedge	15/8"	1"	½"	$29.00
#450		⅛" **Beading**	⅛" R	¾"	½"	¼"	$11.00
#451		3/16" Beading	3/16" R	⅞"	½"	¼"	$11.00
#233		¼" Beading	¼" R	1"	½"	¼"	$13.00
#453		5/16" Beading	5/16" R	1⅛"	½"	¼"	$14.00
#454		⅜" Beading	⅜" R	1¼"	⅝"	¼"	$15.50
#455		½" Beading	½" R	1½"	¾"	¼"	$17.00
#375		**45 degree**	45 degree	⅝"	1½"	¼"	$15.00
#676		**Chamfer**	45 degree	⅞"	1⅞"	½"	$23.00

New 24-page catalogue now available, featuring hundreds of bits.

MAKE BEAUTIFUL RAISED PANEL DOORS . . . WITH YOUR 1/4" ROUTER!

Professional production quality bit makes it quick and easy to produce matching rails and stiles — the panel raising bit with ball bearing guide makes the raised panel perfect every time.

SALE PRICE **$69.95** FOR COMPLETE SET

Regular value Over $150.00

ORDER ITEM # 554 for 1/4" Shank Set (Includes all bits shown below)

SET ALSO AVAILABLE IN ½" SHANK - $79.95 - Item #852

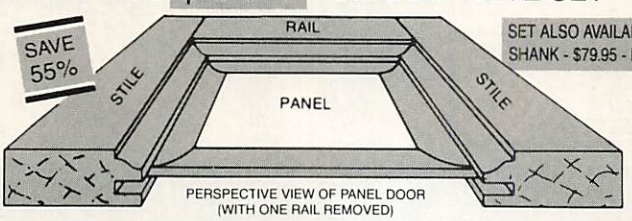

RAIL & STILE SHAPER CUTTER
Item #150 - **$49.95**

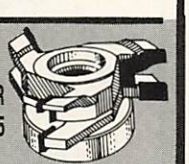

RAISED PANEL BIT
SUPPLIED WITH BALL BEARING

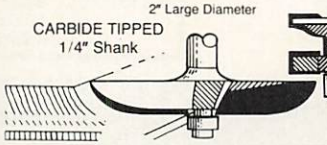

REVERSIBLE COMBINATION RAIL and STILE BIT
(For making matching rails and stiles in raised panel doors, etc.) Works with stock from 11/16" to 7/8" thick

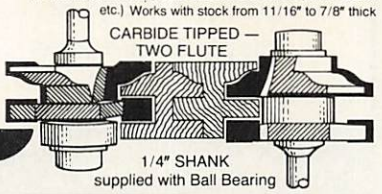

To order by Master Charge or Visa Call Toll Free, 7 Day - 24 Hour Order Service

1-800-533-9298 or send check to: **MLCS Ltd., P.O. Box 4053JF, Rydal, PA 19046**

©1990

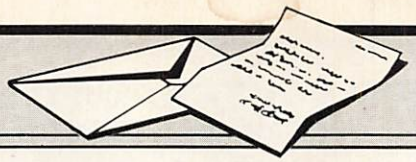

Letters

Your article on dado heads in the November/December 1989 issue was a good one. I often use a wobble dado head and, like many others, have never had much luck measuring the distance between the farthest tooth and the rip fence. However, I recently found a way to do it that's both simple and accurate. First, place a small piece of masking tape on the saw table in front of the dado head. Then, with a piece of scrap stock clamped to the miter gauge, start the saw and run the scrap stock into the dado head until it touches just enough to mark the full width of the dado cut. Now, slide the miter gauge back so that the scrap stock is on the tape and shut off the saw. With a pencil, mark the dado location on the tape. The marks on the tape can now be used to measure the exact distance to the fence.

Ralph Reed
Winter Haven, Fla.

The Shop-Built Spindle Sander in the November/December 1989 issue was exactly what I needed for my workshop. To keep dust to a minimum, I modified it a bit so that it can be hooked up to my shop vacuum. I added an electric plug for the vacuum, and also a light that comes on when the switch is activated. It works like a charm.

Robert L. Buettner
Cullman, Ala.

As soon as I saw the coaster set in the September/October 1989 issue I thought it would make a good Christmas present. I dug out an assortment of veneers that I've had lying around for at least 25 years and proceeded to make 12 sets. I used your three patterns and added two of my own designs — a desert scene and a lone wolf baying at the moon. I also added a monogram to each one using Old English block letters.

Percy F. Hanson, Walhalla, N.D.

Where can I get the hardware (tuning pins, wire, etc.) that is needed to make door harps?

C.R. Burns
Chicago, Ill.

Door harp hardware is available from Folkcraft Instruments, Box 807, Winsted, CT 06098 or Meisel Hardware Specialties, P.O. Box 70, Mound MN 55364.

I'm looking for a cutter for the drill press that will allow me to make wooden wheels. Can you help?

H.V. Rutledge
San Angelo, Tex.

The Tool Company, 5271 Raintree Parkway, Lee's Summit, MO 64082, sells a tool for the drill press that will make toy wheels from 1 3/8 in. diameter to 4 1/2 in. diameter. Write or call (816) 537-6308 for more information.

FORSTNER BIT AMAZING OFFER!

Quality, imported Forstner Bits make glass smooth, flat bottom, clean holes, even through veneer, knots and end grain, in any direction. Indispensable for furniture making. Will bore any arc of a circle, make pocket and blind holes and even make overlapping holes for mortising.

7-pc Set
1/4" to 1" in wood case
ONLY $34.99
Ship/Handl $3.00

ITEM NO. #10-1325

- Precision Ground, Quality Bits
- Machined from High-Carbon Steel
- Hardened to HRC 50-52
- Reusable Moulded Covers Protect Rims

COMPLETE 16-pc Set
1/4" to 2 1/8" in wood case
ONLY $89.99
Ship/Handl $5.00

ITEM NO. #10-1330

- Wood Storage Box Included
- 3/8" shanks

For a FREE price list of individual Forstner Bits, and other wood working tools, send your name and address to: **Dollar Trading Corp. PO Box 964 Ridgefield, CT 06877**

3" FORSTNER BIT 1/2" SHANK

ONLY $34.99
Ship/Handl $3.00

ITEM NO. #10-1322

30-DAY MONEY-BACK GUARANTEE

CALL TOLL FREE: 800-447-7770 • VISA/AMEX/MC
From Canada: 616-957-5900
or write: DOLLAR TRADING CORP. DEPT WWJ 30
PO Box 8433 Grand Rapids MI 49512
Michigan and Connecticut buyers please add sales tax.

I have a supply of pearwood logs and I'm looking for a way to remove the bark without damaging the wood. Any suggestions?

D.G. Millenbruch
Ridgefield, Conn.

If the trees were felled in the spring or summer, the bark should come off with little trouble. The fragile layer of cells formed during the growing season make it easy to remove the bark with just a screwdriver or other wedge-shaped tool.

If, however, the tree was felled during the fall or winter, the bark will likely be securely fastened to the underlying sapwood, which makes removal rather difficult. You can try steaming or saturating the bark with boiling water. If that doesn't work, you will probably need to remove it with a saw or spokeshave.

Where can I get a good selection of wildfowl carving patterns?

Brian Kelly
Atlanta, Ga.

Wood Carvers Supply, Inc., P.O. Box 8928, Norfolk, VA 23503, carries blueprint patterns of waterfowl, many of them full-size. Write for a copy of their current catalog.

Woodworking Clubs

A new woodworking club, tentatively called the Annapolis Woodworkers Guild, is forming in the Annapolis, Maryland, area. If you think you might be interested in joining, write to Don Ames, 107 North Linden Avenue, Annapolis, MD 21401, or call him at (301) 269-0104.

During the fall through spring months, the Woodworkers of Central Ohio (W.O.C.O.) will meet five times at the Eastland Career Center in Columbus. Our meetings, held on Saturdays, are all-day demonstrations and lectures open to those who live in Columbus and the surrounding communities. We offer an invitation to woodworkers of all skill levels to join us. For more information phone Lou Gatch, president of the W.O.C.O., at (614) 866-7307.

Readers in the Washington, D.C. area may be interested in joining the Washington Woodworkers Guild. For details write to Robert A. Sloan, 1215 N. Ft. Myer Drive, No. 304, Arlington, VA 22209.

Walter Naron is working to start a local woodworking club in Greenville, Kentucky. For information write to him at 217 West Main Cross, Greenville, KY 42345.

ELIMINATE STICKING. KEEP SAW BLADES SHARP FOR CLEAN FAST CUTTING...

NEW Sprayway® SAW CLEANER

Cleans saws, router bits and shaper cutters of pitch, gum, etc. Packaged in handy aerosol.

Another Helper!
SPRAYWAY F-101
DRY LUBRICANT
Contains no Silicone, Paintable. Reduces cutting friction, inhibits resin build-up . . . The Woodworker's Lubricant.

Sprayway Products Contain Environmentally Safe Propellents.

Order from your distributor or:
SPRAYWAY, INC. (Mfr.)
484 Vista Ave. • Addison, IL 60101-4468
(1-708) 628-3000 • (1-800) 332-9000

Finally A Solution
to accurately setting your table and radial arm saw

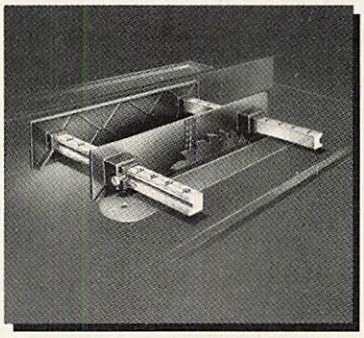

Produce fast and professional results when setting your power tool with PARAGAUGE.

PARAGAUGE accurately sets table saws, radial arm saws, band saws, drill presses and router tables by providing **perfectly parallel measurements** up to 10 inches in width.

If you're tired of setting and re-setting a rip fence to obtain that perfect measurement, then PARAGAUGE was developed just for you.

Why spend hundreds on complex and permanent fence systems when PARAGAUGE is completely portable and will produce the same results at a fraction of the cost.

A must for every woodworker from the HOME HANDYMAN to the PROFESSIONAL.

PARAGAUGE™
U.S. Patent Pending

Introductory Price $29.95 +$3.50 shipping

To order your PARAGAUGE using Mastercard or VISA
call 1-800-343-6129
(7day/24 hour order service)
or, if you prefer to order by check or would like a **free brochure** write
ACCUSET TOOL CO., INC. • P.O. Box 1088 • Dept. J • Troy, MI 48099
Michigan residents must add 4% state sales tax – No C.O.D. orders please.
Each PARAGAUGE is sold with a no-risk 30 day money back guarantee.

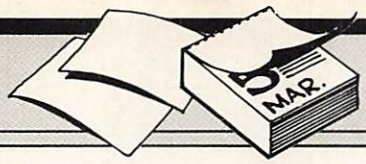

Events

We will gladly list as many events of interest to woodworkers as space permits. Listings are free and may include shows, fairs, competitions, workshops and demonstrations. The deadline is six weeks before publication, March 15 for the May/June issue. Please address announcements to the Events Department. Readers planning on attending events should call ahead if possible. Scheduled dates and locations sometimes change between publication and the date of the event.

Arizona: The Woodworking Shows, Arizona, March 9-11, Veterans' Memorial Coliseum, Phoenix. For information call 1-800-826-8257.

California: The Woodworking Shows, No. California, March 16-18, San Jose Civic Auditorium; Sacramento, May 4-6, California Expo and State Fair; So. California, May 11-13, Pasadena Convention Center. For information call 1-800-826-8257.

Colorado: Anderson Ranch Arts Center, Summer Workshops: Basic Upholstery, Jim Barefoot; Chair Design, Robert DeFuccio; European Carving, Nora Hall; Canoe Building, Rod King; Marquetry, Veneer and Inlay, Silas Kopf; Basic Woodworking, Peter Korn; Rustic Furniture, Daniel Mack; Furniture Making, Stephen Proctor; Furniture, Sam Maloof; A Personal Approach, James Krenov; Faux Finishing, Rita Miller Wagennar. For information contact the center at P.O. Box 5598, Snowmass Village, CO 81615; (303) 923-3181.

The Woodworking Shows, Colorado, March 2-4, National Western Complex, Denver. For information call 1-800-826-8257.

Connecticut: Brookfield Craft Center, Winter Workshops: March 3-4, Advanced 18th Century Woodworking Techniques, Eugene Landon; March 10-11, Fine Furniture Construction, Robert March; March 17-18, Router Techniques Workshop, Bill Gundling; March 24-25, 18th Century Carving Techniques, Eugene Landon; March 31-April 1, Woodturning, Dennis Elliott. For information contact the center at P.O. Box 122, 286 Whisconier Road, Brookfield, CT 06804; (203) 775-4526.

Delaware: Furniture by Wendell Castle, a retrospective exhibition, March 9-May 13, Delaware Art Museum, Wilmington. For information call (302) 571-9590.

Georgia: The Woodworking Shows, Atlanta, March 23-25, Lakewood Fairgrounds, Atlanta. For information call 1-800-826-8257.

Illinois: The Woodworking Shows, Chicagoland, April 20-22, Odeum, Villa Park. For information call 1-800-826-8257.

Louisiana: Woodworking World, The Baton Rouge Show, March 16-18, Riverside Centroplex, Baton Rouge. For information call 1-800-521-7623.

Maine: Woodworking World, The Portland Show, April 27-29, Portland Expo Building, Portland. For information call 1-800-521-7623.

Massachusetts: The Worcester Center for Crafts: 20th Annual May Craft Fair, May 18-20; Weekend Workshop, April 7-8, Design and Construction with Bent Wood, Michael Fortune. For information contact the center at 25 Sagamore Road, Worcester, MA 01605; (508) 753-8183.

Minnesota: American Craft Expo '90, April 6-8, Minneapolis Convention Center. For information call 1-800-836-3470.

Missouri: Woodcarving Show and Competition, Kansas City Chapter of the National Woodcarver's Association, March 9-11, Metcalf Shopping Center, Kansas City. For information call (913) 432-8938.

New York: Woodworking World, The Buffalo Show, April 6-8, Erie County Fairgrounds, Hamburg. For information call 1-800-521-7623.

North Carolina: Penland School, Wood Classes: April 19-27, Wood, Craft, Art, John Brooks; May 14-25, Dynamic Objects, Paul Sasso; May 28-June 8, Wood Carving and Shaping, Peter Pierobon; June 11-22, Furniture Design, Phillip Tennant; June 25-July 6, Woodworking, C.R. "Skip" Johnson; July 9-20, Furniture from the Source, Brad Smith; July 23 - Aug. 8, Furniture, Lauren McDermott; Aug. 13-24, Design in Wood, Leo Doyle. For information contact: Penland School, Penland, NC 28765; (704) 765-2359.

International Home Furnishing Market, April 19-27, International Home Furnishing Center, High Point. For registration and information call (919) 889-6144.

Country Workshops, 1990 Classes: June 25-30, Ladderback Chairmaking, Dan Mayner; July 9-13, Scandinavian Woodcraft, Wille Sundqvist; July 16-20, Advanced Scandinavian Woodcraft; July 30 - Aug. 4, Windsor Chairmaking, Peter Murkett; Aug. 13-18, Swiss Cooperage, Drew Langsner; Sept. 8-16, A Craft Tour of Switzerland, Drew Langsner. For information contact: Country Workshops, 90 Mill Creek Road, Marshall NC 28743; (704) 656-2280.

Ohio: The Woodworking Shows, Greater Cleveland, April 6-8, International Expo Center, Cleveland. For information call 1-800-826-8257.

Oklahoma: Woodworking World, The Oklahoma City Show, March 9-11, Myriad Exhibition Hall, Oklahoma City. For more information call 1-800-521-7623.

Tennessee: Arrowmont School of Arts and Crafts, Spring Workshops: March 5-9, Woodturning and Design, Leo Doyle, Coopering — Tools and Techniques, Alan Stirt; March 12-16, Bowl and Plate Turning and Carving, Alan Stirt; March 19-23, Woodturning — Artistic and Functional, Ray Key; March 26-30, Woodturning — Artistic and Functional, Ray Key. New Forms, New Functions, a national competition, Feb. 24-May 19. For information call (615) 436-5860.

Texas: Woodworking World, The Houston Show, March 2-4, The Pasadena Convention Center, Pasadena. For information call 1-800-521-7623.

Utah: The Woodworking Shows, Utah, April 27-29, Salt Palace, Salt Lake City. For information call 1-800-826-8257.

Virginia: The Woodworking Shows, Metro-Richmond, March 30 - April 1, Richmond Centre, Richmond. For information call 1-800-826-8257.

Washington DC: 1990 Washington Craft Show, April 19-22, Smithsonian Institution Departmental Auditorium, 1301 Constitution Ave. N.W. For information call (202) 357-2700.

West Virginia: Augusta Heritage Center, Elkins, Spring Dulcimer Week, April 23-29, Chip Carving with Linda Foley. For information call (304) 636-1903.

Readers' Information Exchange

Looking for an owner's manual for an old band saw? Need a bearing for a hand-me-down table saw? Can't find a source of supply for an odd piece of hardware? Maybe our readers can help. Send along your request and we'll try to list it here — and perhaps one of our readers will have an answer for you. Due to space limitations, we'll be unable to list all requests, but we'll include as many as we can.

I'm looking for a cast iron table saw extension for my 10 in. Craftsman table saw, model no. 113.29991.

Don DeYoung
P.O. Box 127, Friesland, WI 53935

I recently acquired a rolltop desk with "The Gunn-Desk, Grand Rapids, Mich." inscribed on the lock escutcheon on the tambour. The lock and mechanism, non-standard, are missing. Anyone have any clues they would be willing to share?

Ralph Woodward
Rt 4, Box 116, Cornelius, OR 97113

I have a Craftsman 10 in. table saw, model no. 113.29991, and am desperately in need of the dado insert assembly, part no. 9-29998.

Ed Herman
107 Wooden Carriage Dr.
Hockessin, DE 19707

I need an owner's manual and parts list for a Craftsman table saw, model no. 113.29903, and a Craftsman planer/molder, model no. 306.233751.

Harry Howard
651 Weavers Chapel Road
Littleton, NC 27850

I need an owner's manual and parts list for a Craftsman radial-arm saw, model no. 113.29400, and for a Craftsman table saw, model no. 103.24440.

Fritz Kazlausky
Grant Community High School
285 East Grand Ave., Fox Lake, IL 60020

I'm looking for owner's manuals and parts lists for two wood lathes. Any information will be helpful. The manufacturers are: J.A. Fay & Egang, Cincinnati, Ohio, model no. 132262; Greenfield Tap and Die Corp., Greenfield, Mass.

Frank J. Meier
3208 Eveningside Dr., Apt. 11
Topeka, KS 66614

I have a Craftsman shaper, model no. 113.23940. I need an owner's manual and parts list.

Don Brown
205 Pine Willow Court
Friendswood, TX 77546

VISIT THE SHOW NEAR YOU!
• Free Workshops • Door Prize •
• Hundreds of Products •
• Seminars by Mastercraftsmen •

★ The Woodworking Shows ★
machinery
tools • supplies

See the Widest Variety of Woodworking Products All Under One Roof!!
HUNDREDS OF ITEMS! NEW PRODUCTS!
Machinery • Power & Hand Tools • Supplies
COMING IN 1990

- Arizona
- Atlanta
- Calgary
- Charlotte
- Chicago
- Cincinnati
- Cleveland
- Colorado
- Columbus
- Connecticut
- Dallas
- Delaware Valley
- Detroit
- Indianapolis
- Kansas City
- Louisville
- Milwaukee
- No. California
- Oregon
- Pittsburgh
- Richmond
- Rochester
- St. Louis
- Salt Lake City
- San Diego
- Seattle
- So. California

1-800-826-8257 or 213-477-8521
Call NOW to be placed on mailing list for FREE Brochure & Discount Coupons
Phone Hours 8-5 Pacific Time Weekdays

Like Having A Lumberyard Right In Your Shop!

MADE IN USA
30-DAY FREE TRIAL!

NOW! Plane, Mold, Sand, Saw with *Infinitely Variable Power-Feed!*

Put this versatile power-feed tool to work in your own shop. See how fast it pays for itself! Quickly converts low-cost rough lumber into valuable finished stock, quarter-round, casing, base mold, tongue & groove . . . all popular patterns . . . even custom designs!

NEW! Variable Feed Rate—Now, just a twist of the dial adjusts your planer from 70 to over 1000 cuts-per-inch! Produces a glass-smooth finish on tricky grain patterns no other planer can handle.

Phone TOLL FREE: 1-800-538-4200, Ext. PR46
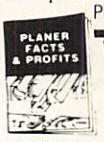
WOODMASTER TOOLS, INC., DEPT. PR46
2908 OAK, KANSAS CITY, MO 64108
☐ YES! Rush my FREE INFORMATION KIT and details on your 30-Day Free Trial Guarantee.

NAME _____
ADDRESS _____
CITY _____
STATE _____ ZIP _____

MEISEL HARDWARE SPECIALTIES
WOODWORKERS HARDWARE

Country Yardsticks

#8574 Yardstick . $1.29/EA

Craft Plywood

3mm (1/8") × 2' × 2'
#7545 . . . . . $4.50/EA
2-9 Sheets $3.50/EA

Cookie Jar w/Metal Lid

#8633 Plastic Jar 8" $3.79/EA
#8635 Metal Lid $1.59/EA

1/4" Basswood Boards

#7293 3-1/2" × 16" linear feet $13.50/EA

Basswood Glue-Ups

#8589 1/2" × 14" × 36" $10.95/EA
#8592 1-1/8" × 14" × 36" $12.95/EA
After 12-31-89 . $14.25/EA

Birch Candle Cup

#CC1 1-1/2" . . $2.90/10
. . . . . $19.00/100

Lazy Susans

#LC3 3" . . . . . $.95/EA
#LC4 4" $1.25/EA
#LC6 6" $2.29/EA

Clipboard Clips

#L5 3" . . . . . $.62/EA
#ST6 6" . . . . . $.95/EA

Saw Tooth Hangers

#S59 1-5/8" . $4.17/100

Black Hammer Hinge w/Screws

#1730 . . . . . $1.62/2
. . . . . $7.17/10

Brass Plated Hinges

#910 1" $1.65/10
#928 1-1/2" . . . $2.59/10
Screws for above
#F125 #5 Fl. Hd. $2.75/100

Sanding Belt Cleaner 8"

#1710 . . . . . $5.37/EA

Plastic Spoke Wheel 4"

#1741 . . . . . $.90/EA

Metal Wheels

#1779 1-1/2" . . $5.99/10
#1780 2" $8.99/10

Shaker Pegs

#7226 3-1/2" . . $2.00/10
. . . . . $15.00/100
#7280 2-1/2" . . $1.90/10
. . . . . $13.90/100
#7227 1-3/4" . . $1.10/10
. . . . . $7.60/100

Birch Spindles
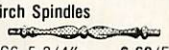
#S6 5-3/4" . . . . $.69/EA
#S85 9" . . . . . $.99/EA

Galley Spindles

#S1 Birch 1-1/8" $1.65/10
. . . . . $10.00/100
#S4 Birch 1-1/2" $1.70/10
. . . . . $15.60/100
#S10AK Oak 1-1/8" $1.50/10
. . . . . $12.00/100
#S10AK Oak 1-1/2" $2.40/10
. . . . . $22.00/100

Lamp Socket

#940 Push Thru . $1.65/EA
#941 Turn Knob . $1.95/EA

Animal Eyes
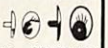
#8681 1-1/8" . . $3.50/20
#8682 1-1/2" . . $4.00/20

Chair Back Spindle 21"
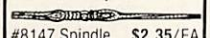
#8147 Spindle . . $2.35/EA

Metal Pails 2-1/4"

#8710 Red $1.09/EA
#8711 Galvanized $1.09/EA

Synthetic Sheep Wool 60" Wide

#8904 Sheep Wool $9.95/YD
12 yards or more . $7.95/YD

Wood Hearts

#7379 1" × 3/16" . . . . . $.59/10
#7380 1" × 3/8" . . . . . $.79/10
#7381 1-3/8" × 1/2" . . . . . $.99/10
#7461 3" × 3/8" $3.75/10

Brass Bottle Opener

#7641 . . . . . $3.69/EA

Grocery List Pad of 500

#14P Buff Color . $7.99/EA
#7430 Peach Color $7.99/EA

1" Grid Paper

#8206 22" × 34" . . . . . $.89/Sheet

Send $1.00 for catalog or $5.00 for catalog plus Best Selling Plan Package ($14.72 value) or order directly from this ad by phone or mail.

ADD SHIPPING & HANDLING:
Mail check or money order and include $4.95 shipping & handling. MN res. add 6% tax. Alaska and Hawaii send $10.95 p&h. Canada send $16.95 (U.S.) p&h. We accept VISA or MC on orders over $25.00.

MINIMUM ORDER OF $25.00
ORDER TOLL FREE . . . Charge Orders Only
1-800-441-9870

MEISEL HARDWARE SPECIALTIES
P.O. Box 70 J-5 Mound, MN 55364

1/2" Shank Carbide-Tipped Router Bits Moulding Plane Profiles

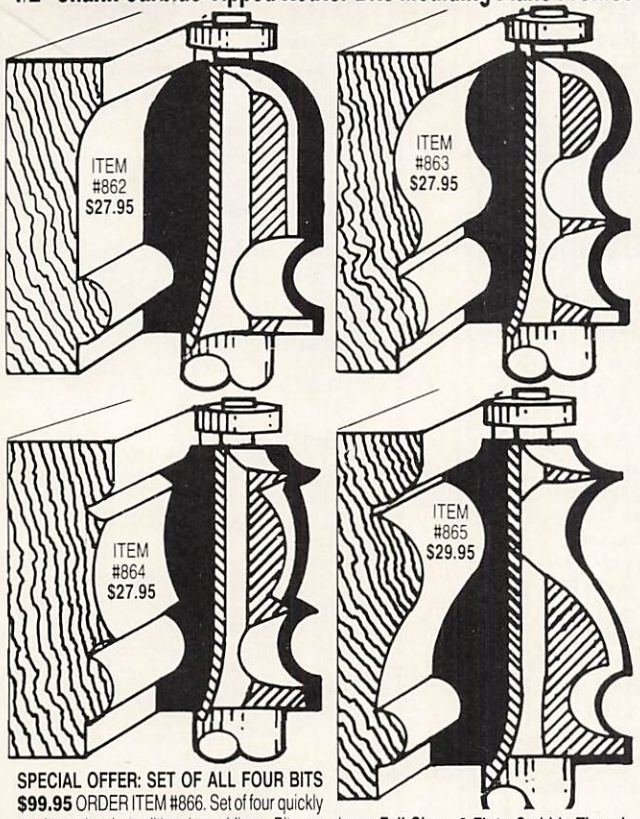

SPECIAL OFFER: SET OF ALL FOUR BITS
$99.95 ORDER ITEM #866. Set of four quickly produce classic traditional mouldings. Bits are shown **Full Size - 2 Flute Carbide Tipped.**
Order by VISA / MasterCard, 7 Day / 24 Hour Service, Call **1-800-533-9298**
©1990 or send check to: **MLCS Ltd., P.O. Box 4053JD, Rydal, PA 19046**

✻ SANDPAPER ✻

NO GIMMICKS — GREAT PRICES

BELTS: GRITS ASSORTED
UNLESS OTHERWISE SPECIFIED

1 x 30	$.69 ea	3 x 24	$ .80 ea
1 x 42	.69 ea	3 x 27	.83 ea
1 x 44	.69 ea	4 x 21¾	.91 ea
2½ x 16	.73 ea	4 x 24	.94 ea
3 x 18	.74 ea	4 x 36	1.14 ea
3 x 21	.77 ea	6 x 48	2.98 ea
3 x 23¾	.80 ea	2¼ x 80	2.47 ea

OTHER SIZES ON REQUEST

NO LOAD PAPER

	50/pk	100/pk
180-A thru 400-A	$10/pk	$18/pk

PRESSURE SENSITIVE ADHESIVE DISCS!

6"	$1.06 ea	✻	OTHER ITEMS ✻
8"	1.99 ea	✻	WIDE BELTS
9"	2.46 ea	✻	ROLLS
10"	3.05 ea	✻	FLAP WHEELS
12"	4.45 ea	✻	PUMP SLEEVES
15"	6.95 ea		

✻ MINIMUM ORDER $25.00
✻ MASTERCARD, VISA OR CHECK
✻ SATISFACTION GUARANTEED!!

SHEETS: (9 x 11) PRICE

CABINET PAPER

	50/pk	100/pk
40-D	$16/pk	$30/pk
50-D	15/pk	27/pk
60-D	14/pk	25/pk
80-D	13/pk	23/pk
100 thru 150C	12/pk	21/pk

FINISHING PAPER

	50/pk	100/pk
80-A	$ 9/pk	$16/pk
100 thru 280A	8/pk	14/pk

WET/DRY PAPER

	50/pk	100/pk
220 thru 600A	$13/pk	$23/pk

✻ JUMBO CLEANING STICK ✻
$8.80
SEND MAIL ORDERS TO:
ECON-ABRASIVES
P.O. BOX B865021
PLANO, TX 75086
NATIONAL 1-800-367-4101
IN TEXAS (214) 377-9779
✻ TEXAS RES. ADD 6% SALES TAX
✻ SHIPPING CHARGES ADD $4.25

Product News

To keep our readers up-to-date, this column features brief descriptions of new tools and supplies on the market. The product descriptions are provided by the manufacturer and are not a result of tests or reviews by the editors of ***The Woodworker's Journal.***

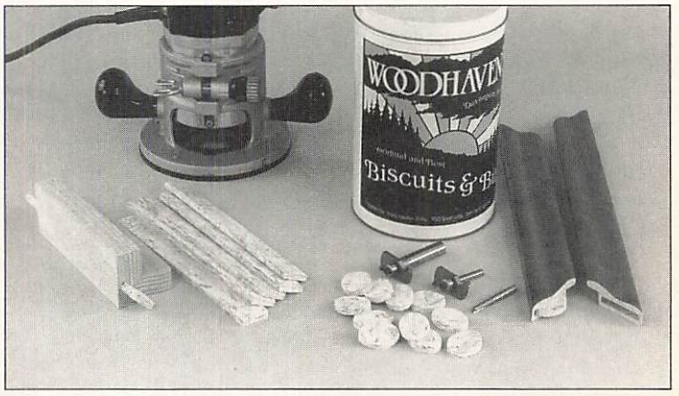

Woodhaven Biscuit & Bit Kit

Woodhaven's Biscuit & Bit Kit allows you to use your router for biscuit joinery and has several advantages over the standard biscuit machine. It's possible to join boards up to 1 in. narrower than a conventional biscuit machine allows. A specially designed slot cutter cuts the joint using the router. Woodhaven's exclusive compressed biscuits are as wide as a #20 biscuit, but much shorter. The biscuit and bit kit includes a 6 mm slot cutter, a 6 mm straight cutter (for spline joinery) 100 biscuits and 10 ft. of spline stock. The kit price is $59.99. For more information contact Woodhaven, 5323 W. Kimberly Road, Davenport, IA 52806; (319) 391-2386.

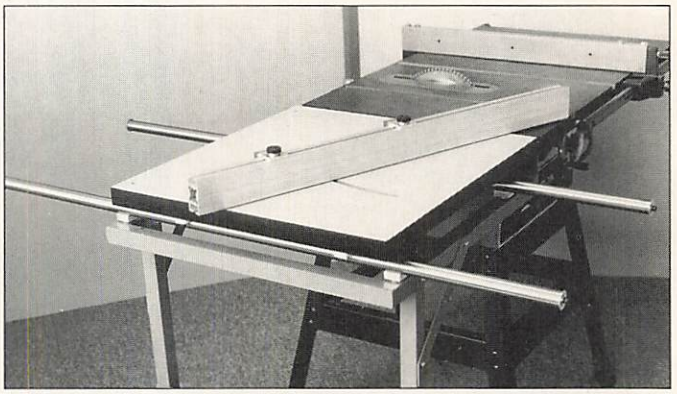

MULE Sliding Table

For years the table saw has been the workhorse in millions of woodworking shops, and for years the handling of larger panels has been a problem. Radial saws, circular saws with straight edges, plus a wide array of home-made jigs have been used to cut miters, dadoes and square panels. It was these problems that prompted a woodworker to invent, use and later manufacture the MULE sliding table. This new sliding table bolts on to the left-hand side of most tilting arbor table saws. The sliding table list price is $369. For more information contact MULE Cabinetmaker Machines, 225 Industrial Parkway, Unit 16, Aurora, Ont. Canada L4G 3V5; (416) 727-7090.

Cabinetmakers' Supplies

Furniture Kits Suppliers

As a service to our readers, ***The Woodworker's Journal*** periodically lists sources of supply for various woodworking products. In this issue we list suppliers of furniture kits. In most cases these kits come pre-cut, pre-sanded, ready to assemble, and require only a minimum of tools. In addition to assembly instructions, some also supply the necessary hardware, sandpaper and glue. This is by no means a complete listing and we hope to include additional companies in future issues.

The Bartley Collection, Ltd.
3 Airpark Drive, Dept. 4662
Easton, MD 21601
Catalog free
Antique reproduction furniture kits, ranging from a pipe box to a Newport Chest and a Queen Anne Highboy.

Cohasset Colonials
830CX Ship St.
Cohasset, MA 02025
Catalog $3
Large variety of colonial-style furniture and reproductions.

Craftsman's Corner
P.O. Box AP, Dept. WJ
4012 N.E. 14th St.
Des Moines, IA 50302
Catalog free.
Broad range of solid oak furniture and accessory kits, from clocks and magazine racks to roll-top desks, file cabinets, and tables and chairs.

Shaker Workshops
P.O. Box 1028WJ
Concord, MA 01742
Catalog $1
Reproductions of Shaker furniture and accessories, ranging from simple oval boxes to chairs, beds and tables.

Yield House
Route 16
North Conway, NH 03860
Catalog free
Antique reproductions and country pieces, from towel racks and wall shelves to armoires and entertainment centers. WWJ

Swing Into Spring!

Build this fun addition for your porch or backyard. For complete plans and instructions to build this wonderful Oak Swing, circle Volume 8 Number 4 on the Back Issue Order Form bound in the center of this issue.

The Woodworker's Journal
P.O. BOX 1629
NEW MILFORD, CT 06776-9976

Super Deal! WOODWORKER'S PACKAGE WORTH $28.00....

-You Get: 25 full size shaker pegs, 25 mini shaker pegs, 25 mug rack pegs, 25 tie rack pegs, plus a unique horse design coat rack plan, beautiful full size tie rack plan, and a full size mug rack plan.
-But That's Not All: Patterns for 10 great items—a hanger for pot holders, note pad holder, napkin holder, muffin server, doughnut holder, pretzel holder, cleanser holder, knife rack, towel bar and spice shelf. Plus: full size plans for four cars and garage.
You'll also receive, FREE, our woodworking catalog! It's loaded with professional power tools, hand tools, wood parts, books, plans and lots more.
Order up to four of these packages. Add $2.95 shipping and handling for each package.

$28.00 Woodworker's pkg. - Just $9.95!
Name _____
Address _____
City _____ State ____ Zip ____

Total: Add $2.95 Shpg/Hdlng Ea. Pkg. (MA Res. add .50 each order for sales tax)	Quantity	Mail Check or Money Order To Trend-Lines, Inc. Box 6447M 375 Beacham St. Chelsea, MA 02150 WKJF0
	Price $9.95 ea.	
	TOTAL	

Wood-Mizer®
World's Largest Manufacturer Of Portable Sawmills

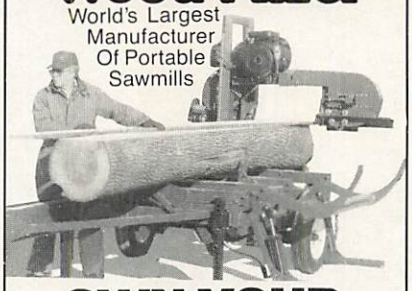

OWN YOUR OWN SAWMILL
Four Models To Choose From
SAVE MONEY—
CUT YOUR OWN LUMBER
- Remote hydraulic log handling
- Capacities up to 32" in dia. by 33' long
- Portable—precise—rugged
- Efficient—more lumber per log

CALL FOR FREE CATALOG
1(800)553-0219
In Indiana call: (317) 271-1542
FREE 44-page catalog or use your MasterCard or VISA to order our 50-minute demonstration video–$10.00
Wood-Mizer Products, Inc. • Dept. MM13
8180 W. 10th St., Indianapolis, IN 46214-2430

FOLEY BELSAW 4 POWER-FED TOOLS IN 1
Plane • Mold • Saw • Sand

Now you can use this ONE power-feed shop to turn rough lumber into moldings, trim, flooring, furniture - All popular patterns, Rip-Plane-Mold & Sand ... separately or in combination with a single motor. Low Cost ...You can own this power tool for only $50 DOWN!

30 DAY FREE TRIAL!
RUSH COUPON TODAY!

FOLEY BELSAW
Foley-Belsaw Co.
6301 Equitable Rd.
Dept. 91526
Kansas City, MO 64120

☐ YES Please send me complete facts about PLANER -MOLDER - SAW - SANDER and details about 30-Day trial offer.
Name _____
Address _____
City _____
State _____ Zip _____

PROFILE

A Conversation With
Allene and Harold Westover

This small New Hampshire enterprise, with a work force of two, has brought to life thousands of new instruments.

In fact, Allene and the Rev. Harold Westover seem bent on filling the world with fiddles, harps and banjos. They do that with their own hands, as well as the hands of the many students they've had throughout their career. They delight in the peal of notes from a new harp. But perhaps their greatest joy is passing their trade secrets along to new generations of instrument makers.

They've spent about 30 years making instruments and teaching others how. But until recently, each also had their own career: Mrs. Westover in education as an art teacher and program director, Mr. Westover in the Episcopal Church as pastor of flocks from Washington D.C. to Walpole, New Hampshire, where the couple now lives.

Spending some time with the Westovers is fun. Mr. Westover's ample proportions and ready laugh encourage an easy familiarity, while a trim Mrs. Westover adds an Aunt Bea good humor and steady bearing to the conversation.

Talking to the two for an afternoon, you can't help but catch their enthusiasm.

"There are 2,650 of our instruments out there singing, and all those others from those we have taught, and that they have taught," Mr. Westover said.

And an afternoon with the Westovers is filled with a variety of music. Mr. Westover relaxes by playing and composing songs on a modern instrument, an electric organ. Mrs. Westover loves to listen to classical music on the couple's elaborate sound-system, which has speakers in the ceiling. Record albums and music books line one whole wall of their apartment. Pictures and sculptures of instruments are everywhere. Instruments are everywhere.

"There are 2,650 of our instruments out there singing, and all those others from those we have taught...."

Harold Westover

Mr. and Mrs. Westover love to wonder at their progeny, to list the countries and continents now home to their stringed children, to think of the lives they've cheered with music, the satisfaction of those they've helped to create a new instrument. They love to talk about how two of their fiddles landed in Russia, or how one happened to end up in China, about the five in Bogota, Columbia, and all the others in Rome, Tel Aviv, Switzerland. It's almost like hearing about a large family of well-traveled children, whose letters home are treasured and reread.

They've also written on the subject, and helped others publish articles on instrument building. One article they helped along has hit an especially strong chord, introducing thousands of people to the craft of making small folk harps.

"It's just such a great thing to think of that many people making a harp," Mr. Westover says of the 1,850 folk harps made from plans they helped publish. (Plans for the harp were published in the March/April 1988 issue of *The Woodworker's Journal*.) To help people make the harps, the Westovers agreed to sell some of the hard-to-find parts for the harp. Selling the parts kits has allowed them to keep an approximate count of how many have been built. The Westovers are also the authors of an article on building the Folk Fiddle that appears on page 51 of this issue.

The Westovers' enthusiasm for building musical instruments is immediately apparent in a walk through the shop. Molds for steam-bending sides sprout from the walls, stacks of premium cedar, maple and walnut line shelves. Special machines for tapering tuning pegs and shaping fiddle bodies crop up among the more usual tools. Another unusual feature is the vise resting on a pedestal in the middle of open floor space. Mrs. Westover, who does the carving on the instruments, likes to be able to move all around the work.

The Westovers also have an assortment of general woodworking machines, about what you'd expect to find in a well-equipped shop. There's a drill press, a table saw, a jointer, a surface planer, a small lathe, a belt sander. They aren't expensive industrial-quality tools, but the machines generally available to hobbyists. For example, the lathe is a Craftsman, the surface planer is a small Ryobi portable.

In fact, the instrument making began as a hobby, first for Mr. Westover, and then for both of them. It eventually evolved into a profitable business, but only after Mrs. Westover got seriously involved.

Mr. Westover said that for years he tried to make money on his instruments, without much success. The enterprise was always "Daddy's unprofitable hobby," he said. But when his wife became fully engaged, the business started turning a profit. "I didn't need a helper, I needed a keeper," he said.

The couple has developed a flexible division of labor that allows for their different talents. Mr. Westover does what he calls the "rough" woodworking, preparing the stock, cutting and shaping the parts, bending the sides. Mr. Westover is also the authority on music theory and the instrument designer.

Mrs. Westover takes charge of details. Her work includes the carvings for the necks and heads, the fine work on the bellies, and the finishing.

The Westovers make both fancy concert-grade instruments and no-frills student models. But they concentrate on the no-frills models because they see a great need for affordable instruments that play well. They make a variety of fiddles, banjos and harps with top-notch materials and well-designed mechanics, but leave off much of the decoration. The heads aren't carved and there's no fancy purfling on the soundboards. (The word "fiddle" denotes a variety of stringed instruments played with a bow, including violas, cellos and violins. The word is also frequently used as a synonym for the violin.)

"You don't play head and you don't play purfling. What you really need is a well-made soundboard," Mrs. Westover said. "In other words, students can afford them."

The Westovers are currently working on a commission to make 16 specially designed renaissance violas for the New York City school system. The rare instruments just aren't available at a reasonable cost from any other source.

It's only been the last several years that the Westovers have devoted their energies full-time to instrument making. Before that, Mr. Westover was part-time pastor of the church, and had his shop in the vicarage. He still occasionally preaches at the church, although he and Mrs. Westover don't live in the

SPECIAL OFFER

Distinguish Your Fine Workmanship With Your Own, Personal

BRANDING IRON For Hard and Soft Wood

$24.00

Plus $2.00 for shipping and handling
Nebr. residents add correct sales tax

ORDER TOLL FREE
1-800-826-7606

MasterCard VISA

SATISFACTION GUARANTEED
or your money back

- Shipped in one week
- Solid brass head — raised letters
- 1st Line: HAND CRAFTED BY — as above
- 2nd Line: Your choice — 20 characters/spaces max.
- Complete with handle
- As above but with 3rd line — $37.00 + $2.00

For free brochure, write or call (402) 464-0511

Order by mail from: **NOVA TOOL CO.**
12500 Finigan Rd., Dept. WJ
P.O. Box 29341, Lincoln, NE 68529

QUALITY HARDWOODS

Clear • Kiln Dried • Surfaced 4 Sides • ¾" Thick
3" to 10" Widths • 2-Ft. to 7-Ft. Lengths
20 Sq. Ft. Packs • Random Widths & Lengths

Red Oak-Plain	$45.00	Ash	$49.00
White Oak	$44.00	Basswood	$31.00
Pecan	$42.00	Poplar	$27.00
Cherry	$59.00	Aromatic Red Cedar (Tight Knots)	$32.00
Walnut	$60.00	Cypress	$31.00
Hard Maple	$33.00	Birch	$43.00

Orders Shipped C.O.D. by UPS. Shipping Charges Added.

Texas Residents Add 7% Sales Tax.

To Order Call 214-693-4735 or Write to:

K & S SPECIALTY LUMBER
P.O. Box 125 - Hill's Lake Road - Carthage, TX 75633

Fun - Profitable - Easy to Make Projects

WOODCRAFT

FULL SIZE PATTERNS

COUNTRY & FOLKART COLLECTIONS

A-10 Patriotic Projects
B- 5 Wind Action Whirligigs
C-45 Country Folkart Figures
D-13 Wooden Plaque Designs
E-10 Old Fashioned St. Nicks
F- 5 Country Door Harps
H-24 Shelf Critter Designs
J- 8 Country Shadowboxes
K-12 Country Shelf Designs
L-14 Folkart Shelf Sitters

$6.00 EACH
3 FOR ONLY $14.00

All prices include FIRST CLASS P&H.
VISA/MC($25 MINIMUM)
phone 313-629-7712

The Winfield Collection, DEPT. WJ30
12044 Parkin Lane, Fenton, MI 48430

NEXT DAY SHIPMENT----SATISFACTION GUARANTEED

OLD-FASHIONED "COUNTRY THINGS"
SMALL SIZES PERFECT FOR DOLLS & TEDDY BEARS

M-Doll Cradle (20" long)
N-High Chair (10" wide)
P-Rocking Chair (10" wide)
R-Toy Wagon (10" wide)
S-Hall Seat (11" wide)
T-School Desk#1 (9" wide)
V-Wheelbarrow (30" long)
W-School Desk#2 (11" wide)
X-Antique Sled (11" wide)
Y-Tricycle (14" tall)
Z-Scooter (15" long)

2 FOR ONLY $6.50

ALL 11 PATTERNS FOR ONLY $24.00

Catalog of Over 500 Top Selling Designs, $1.00--Free with Order

Profile
Continued

vicarage anymore. He said his vicarage shop is now used for after-church coffee hours.

"Yesterday I was having tea in the social room and I was standing there talking, probably where I had my drill press," Mr. Westover said.

The Westovers' interest in building instruments began at an early age, for both of them. As a child of 10, Harold decided one day that a clothes pole prop could serve very well as a xylophone base. About the same time Allene discovered that bamboo makes a fine flute.

And it wasn't too long after that the Westovers discovered each other as well. At 15, Harold proposed to Allene.

"I proposed to her on the first date. She laughed at me. But she doesn't laugh anymore," Mr. Westover said.

At the time, they both lived in Columbia, Missouri, home to both the University of Missouri and Stephens College. They were married about seven years later, in 1945. And in their 44 years of marriage the Westovers have found new ways to explore their musical interest wherever they happen to land.

Even during World War II, Mr. Westover found himself involved with musical instruments. As a volunteer chaplain he repaired portable field organs in Africa. He explained that the desert sand storms regularly would clog up the portable organs, so his knowledge of instruments was put to use repairing the damage.

The work with organs has led to another of Mr. Westover's specialties, the portative organ. The small organs are reproductions of an instrument popular in Europe during the early Renaissance. They are small enough to rest on the lap and are played with one hand, while the other hand operates a small bellows. The keyboard is much like a modern piano. In fact, Mr. Westover pointed out that the portative organ keyboard was the first to have keys all of the same size. Earlier organs had keys that corresponded to the size of the organ pipe — very wide keys for the large bass pipes, and very narrow keys for the tiny treble pipes. Mr. Westover said he spent many years making both portative organs and stringed instruments. Now, however, he works more often with stringed instruments, although he still takes occasional commissions for the organs.

Both the Westovers began their serious work in stringed instruments at about the same time. The couple was in Washington D.C., with Mr. Westover newly named assistant rector of St. John's. One of Mr. Westover's projects there was organizing a small recorder ensemble. Recorders are a simple medieval flute. "I thought early music was simple enough so that a lot of people would be interested," Mr. Westover said.

Mr. Westover decided he needed a particular kind of instrument — a viola da gamba — to carry the bass line for the recorder group. The instrument is like a large violin, with a range similar to a cello. Like most of the instruments made by the Westovers, it's from the Renaissance. In his search for the rare viola da gamba, Mr. Westover wound up in the shop of

Washington D.C. instrument maker Willis Gault.

Gault didn't have any of the violas, but suggested that Mr. Westover build one. When Mr. Westover told Gault he didn't know how, Gault replied, "All right, I'll teach you, it's very easy."

"He lied," Mr. Westover said.

So Mr. Westover became a regular at Gault's shop, spending his time absorbing the craft from a master.

"It was very nice. We'd build for a while and talk for a while," Mr. Westover said.

And Mrs. Westover soon decided to build a viola da gamba for herself. She learned so quickly that her first instrument became famous on the international concert stage, owned by Laura Pollack. Mrs. Westover's treble viola da gamba features an elaborate carved head.

The Westovers started a career that has spanned 30 years and seen the creation of thousands of instruments. The couple has made about 30 different kinds of instruments.

During those years the Westovers haven't been afraid to be different. For example, the Folk Fiddle in this issue has a flat soundboard, or belly, while traditional violins have an arched belly. Mr. Westover said that it's been established that a flat belly plays just as well as the traditional variety, and that tonal quality is affected by other factors such as the type of woods and interior geometry.

The Westovers have also simplified fiddle making by incorporating mechanical tuning machines instead of the traditional wooden pegs — which need to fit precisely into a tapered mortise — and making the profile more guitar-like than a traditional violin. They also leave off the carving and use a quick polyurethane finish. All the changes don't affect the sound that much — although Mr. Westover is the first to admit that these folk fiddles aren't Stradivari quality. They are, however, good-quality, affordable instruments that students can learn on.

"What we've tried to do is cut corners that don't affect the sound or the durability," Mrs. Westover said.

In the process, the Westovers have also helped initiate hundreds of people into the craft of instrument making. They give four-day workshops in the United States and Canada to about 15 students at a time. And the Westovers' enthusiasm for teaching is such that they insist each student finish an instrument. They'll go to almost any length to make sure that the instrument gets done.

Sometimes the student leaves without varnish on the instrument, but the piece is complete. Mr. Westover said that thus far only one student has failed to finish an instrument. The Westovers are truly confident they'll be able to get any student through all the steps needed to build an instrument, no matter how inexperienced.

"We know at the beginning that all their fears about failing are not going to come true," Mr. Westover said.

CASCADE TOOLS, INC.

P.O. Box 3110, Bellingham, WA 98227

SY BRAND *Finest Quality Carbide Tipped Router Bits & Shaper Cutters*

RABBETTING

SIZE	PART NO.	PRICE
1/4" Straight	C2030	$24.95
3/8" Straight	C2031	$26.95
1/2" Straight	C2032	$28.95
3/4" Straight	C2033	$32.95
1" Straight	C2034	$35.95
1-1/2" Straight	C2035	$36.95
2" Straight	C2036	$59.95

CORNER ROUND

SIZE	PART NO.	PRICE
1/4" Radius	C2059	$24.95
3/8" Radius	C2060	$26.95
1/2" Radius	C2061	$28.95
3/4" Radius	C2062	$35.95
1" Radius	C2063	$49.95
1-1/4" Radius	C2064	$49.95

FLUTE

SIZE	PART NO.	PRICE
1/4" Flute	C2046	$24.95
3/8" Flute	C2047	$26.95
1/2" Flute	C2048	$28.95
3/4" Flute	C2049	$32.95
1" Flute	C2050	$35.95

BEAD

SIZE	PART NO.	PRICE
1/4" Bead	C2052	$24.95
3/8" Bead	C2053	$26.95
1/2" Bead	C2054	$28.95
3/4" Bead	C2055	$32.95
1" Bead	C2056	$35.95

DOUBLE-FLUTED
Straight

1/4" SHANK

PART NO.	D	PRICE
C1001	1/4	$6
C1002	5/16	$6
C1003	3/8	$6
C1004	1/2	$8
C1005	5/8	$10
C1006	3/4	$10
C1007	1	$12

1/2" SHANK

PART NO.	D	PRICE
C1008	1/4	$6
C1009	5/16	$6
C1010	3/8	$6
C1011	1/2	$8
C1012	1/2	$15
C1013	5/8	$10
C1014	5/8	$15
C1015	3/4	$10
C1016	3/4	$15
C1017	1	$12
C1018	1-1/4	$12
C1019	1-3/8	$15
C1021	1-5/8	$18

BEADING

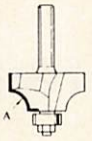

1/4" SHANK

PART NO.	A	PRICE
C1157	1/16 R	$11
C1158	1/8 R	$11
C1159	3/16 R	$11
C1160	1/4 R	$12
C1161	5/16 R	$13
C1162	3/8 R	$15
C1163	1/2 R	$16

1/2" SHANK

PART NO.	A	PRICE
C1171	1/2 R	$16
C1172	3/4 R	$20

ROUNDOVER

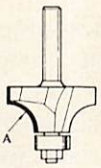

1/4" SHANK

PART NO.	A	PRICE
C1174	1/16 R	$11
C1175	1/8 R	$11
C1176	3/16 R	$11
C1177	1/4 R	$12
C1178	5/16 R	$13
C1179	3/8 R	$15
C1180	1/2 R	$16

1/2" SHANK

PART NO.	A	PRICE
C1187	1/2 R	$16
C1188	5/8 R	$20
C1189	3/4 R	$20
C1190	7/8 R	$34
C1191	1 R	$34
C1192	1-1/4 R	$40

DOVETAIL

1/4" SHANK

PART NO.	D	PRICE
C1067	1/4	$7
C1068	3/8	$7
C1069	1/2	$7
C1070	9/16	$8
C1071	3/4	$9

1/2" SHANK

PART NO.	D	PRICE
C1074	1/2	$7
C1076	3/4	$9
C1077	1	$12

COVE

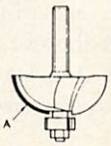

1/4" SHANK

PART NO.	A	PRICE
C1138	1/16 R	$12
C1139	1/8 R	$12
C1140	3/16 R	$12
C1141	1/4 R	$13
C1142	5/16 R	$14
C1143	3/8 R	$15
C1144	1/2 R	$16

1/2" SHANK

PART NO.	A	PRICE
C1149	1/2 R	$16
C1151	3/4 R	$28

ROMAN OGEE

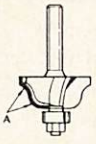

1/4" SHANK

PART NO.	A	PRICE
C1153	5/32 R	$16
C1154	1/4 R	$18

1/2" SHANK

PART NO.	A	PRICE
C1155	5/32 R	$16
C1156	1/4 R	$18

VISA **ORDER TOLL FREE 1-800-235-0272** MasterCard

MAKING DRAWERS

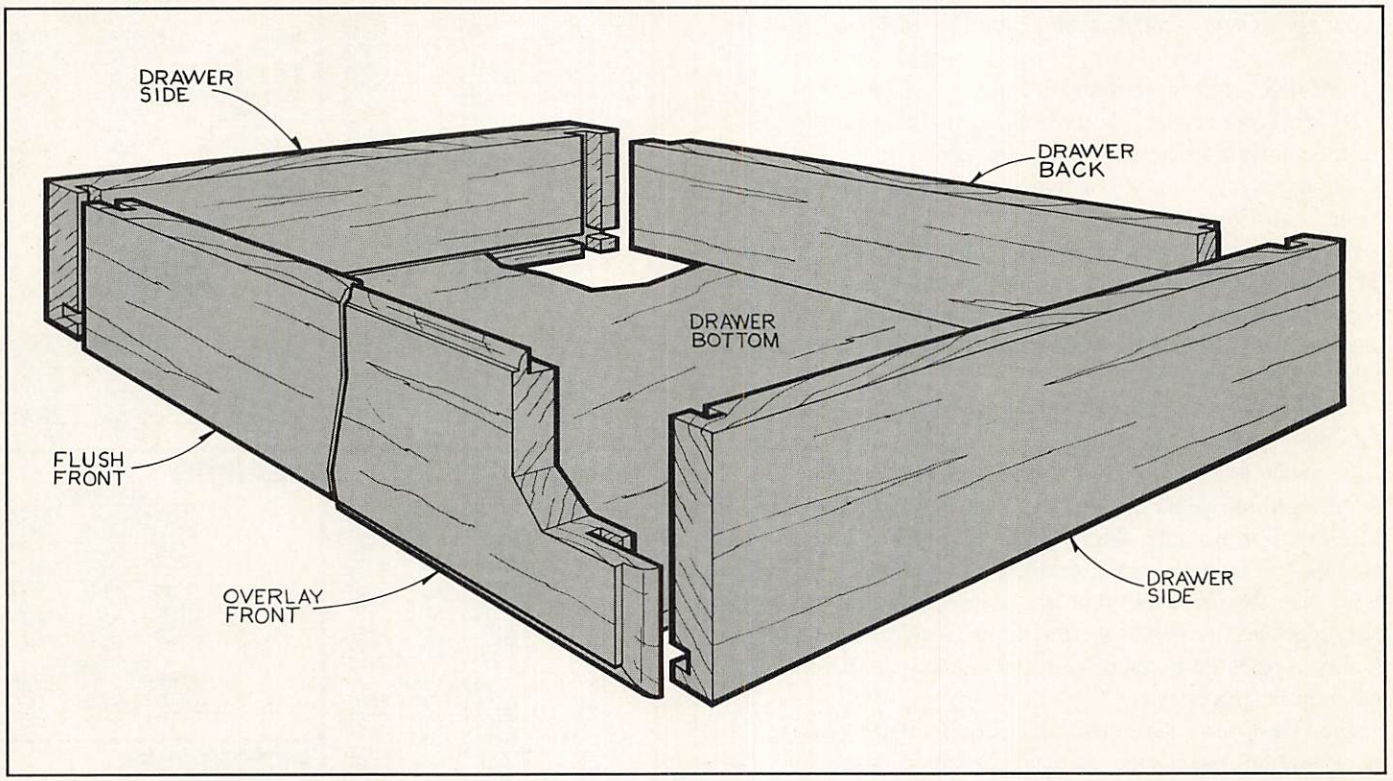

It's hard to be a woodworker for any length of time without making drawers. Wall shelves, tables, toys and folk-art silhouettes are all great projects, but eventually you will face the inevitable cabinet — and the need to make drawers.

Actually, drawers aren't an especially difficult challenge. Once you've made that first drawer you'll probably sit back and ask yourself why you waited so long. And, if you are working on a project with several drawers of the same size, you'll quickly discover how well-suited drawers are to limited production runs.

The biggest question to be answered when a project requires drawers is usually what type of drawer construction to use. Sometimes the answer is obvious, such as on a reproduction of a museum piece where you want your project to be an exact copy of the original. If the original cabinet had dovetailed drawers, then you'll want to use dovetails for the drawers on your reproduction. But more likely you'll be building a piece where any of a number of different drawer construction techniques would do.

The next logical question is whether one type of drawer construction is superior to another. From a standpoint of strength it's hard to beat dovetails (Fig. 1). But for many uses a rabbet-and-dado construction (Fig. 2) is reasonably strong, and much easier to make. Another very strong though a little unconventional construction is the splined-miter (Fig. 3). You'll see this type of drawer on small jewelry boxes, or in other small cases where an applied front is then added to the drawer box. Since a drawer is in most respects just a box, almost any type of box construction is also acceptable for drawers. Finger joints (Fig. 4) are about as strong as dovetails, and in some applications

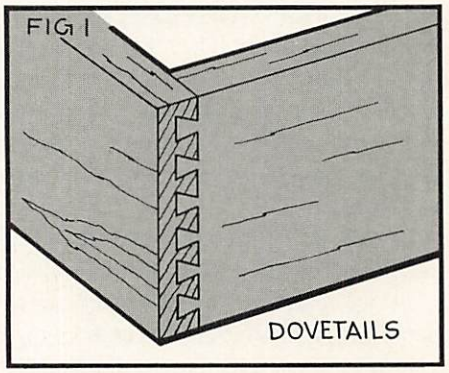

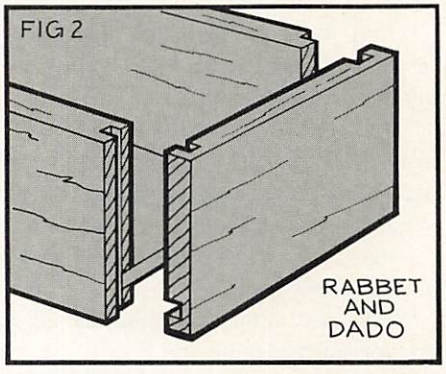

the exposed finger joints on the front make an interesting design detail. Or you can add an applied face to the drawer box where an overlay is required. The simple rabbeted and finish-nailed construction (Fig. 5) is adequate for many applications where the drawer is small and will not have much stress placed on it.

Tied up with the question of how to build the drawer are several other considerations. Is the drawer inset and flush with the case front (Fig. 6), or does it stand proud of and overlay the front (Fig. 7)? Is the drawer front one piece, or will it have an applied face (Fig. 8)? The applied face is handy for drawers that use commercial hardware since it allows for adjustment to a proper fit regardless of how the drawer hangs.

But, how the drawer hangs raises other questions. Will you be using store-bought commercial drawer slides, or will you be using a drawer frame-and-guide system? If you opt for the commercial hardware, then the drawer box must be sized to allow for the slides (Fig. 9). For traditional drawer-frame-in-carcase construction, you'll probably be using drawer guides on either side, unless the drawers fit directly against the case sides. If you are using a design where there aren't any drawer frames to support the drawers, and you don't want to use the commercial hardware, you can make your own drawer guides/hangers (Fig. 10). These shop-made guides also serve as drawer stops. The guides mount to the case sides and fit into matching grooves cut into the drawer sides.

There are other essentials, such as stock thickness, how the drawer bottom is mounted, and where to locate a drawer stop if one is needed. As for stock thickness, in most drawer constructions that do not use an applied face, the drawer front is thicker than the sides and back. The sides and back are usually a secondary wood, since a cabinet-quality hardwood would be wasted where it's not seen.

The drawer bottom, whether solid stock or plywood, usually fits into a groove in the sides and front. It can be screwed or nailed into the bottom edge of the drawer back, which allows for replacement if necessary. If the drawer bottom is also captured in a groove in the drawer back, then it can not easily be replaced.

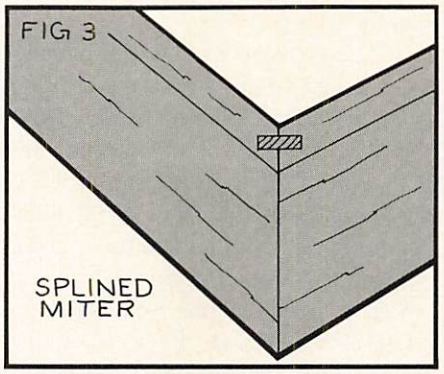

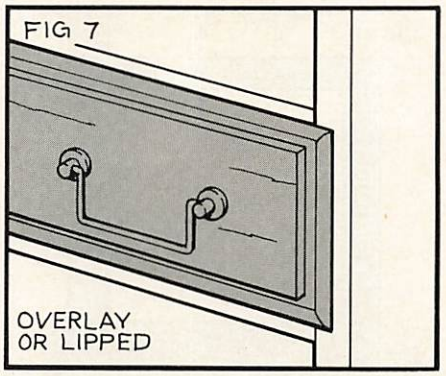

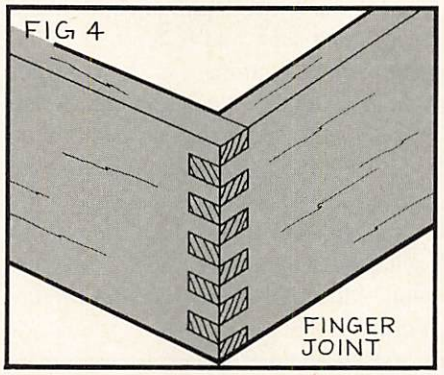

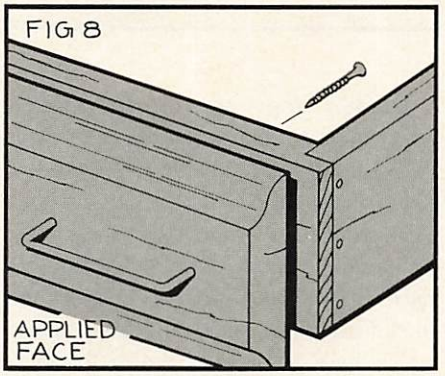

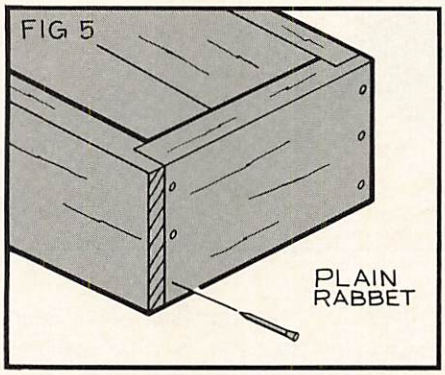

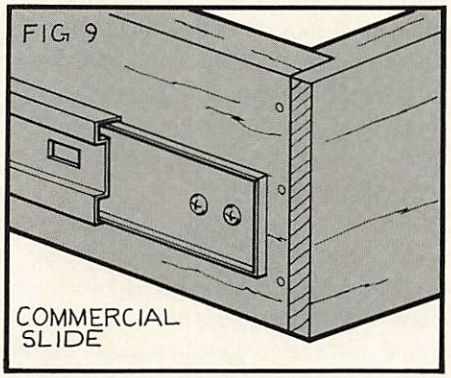

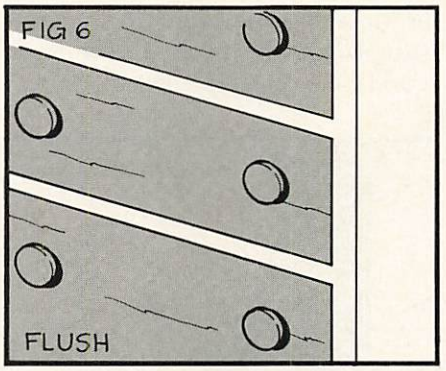

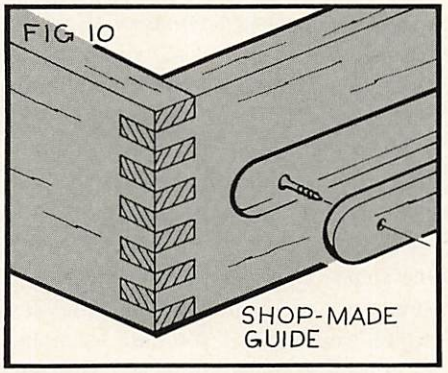

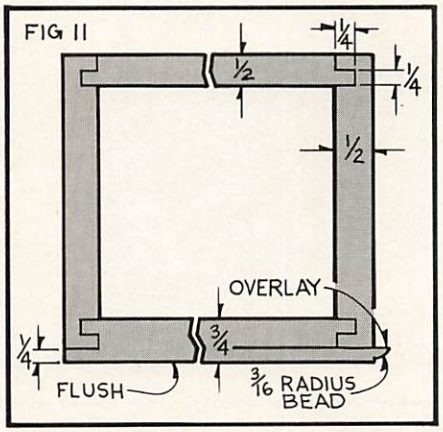

Drawer stops are usually located either above or below the drawer. If you have a solid bevel-edged drawer bottom that's about flush with the bottom edges of the sides and front, then you'll want to mount the stop above. The drawer back is sized narrower to allow for the thickness of the stop. More commonly you'll have a plywood drawer bottom. Size the stop thickness just a little less than the distance between the groove for the drawer bottom and the bottom edge of the sides. Size the back so the bottom will screw up into it's bottom edge. On a wide drawer it's best to use two stops, one on each side.

Step-By-Step

With so many different drawer construction techniques, it's not easy to select just one to concentrate on. Dovetails and box joints are the strongest, and the rabbeted construction is certainly the easiest. But from a standpoint of both strength and ease of construction, the rabbet-and-dado, cut on the table saw using a dado head, is a good compromise. It's considerably stronger than the plain rabbet, yet only requires a little more work. Best of all, once you have the setups right, this method is ideally suited to production drawer making, which saves time if you have a number of drawers to make. Remember, though, rabbet-and-dado construction is best for small to medium sized drawers. For larger drawers — those over 30 in. wide — you'll want to use dovetails or box joints.

Our step-by-step will make two drawers, one that's got an overlay or lip on the front and one with no overlay (Fig. 11). The steps for both drawers are identical through most of the process. Our sample drawer has a 3/4 in. thick front, 1/2 in. thick sides and back, and a 1/4 in. thick plywood bottom.

Step 1: After cutting your stock to length and width, set up the table saw for the rabbet-and-dado cuts. As shown, for a drawer with a 3/4 in. thick front and 1/2 in. thick sides and back, your initial setup will be with the dado head set for a 1/4 in. wide by 1/4 in. deep cut. Set up a stopblock to index the cut, and use the miter gauge to pass the stock across the dado head. This setup is used to cut the 1/4 in. wide by 1/4 in. deep grooves on each end of the drawer sides. This step applies to both overlay and no-overlay drawers.

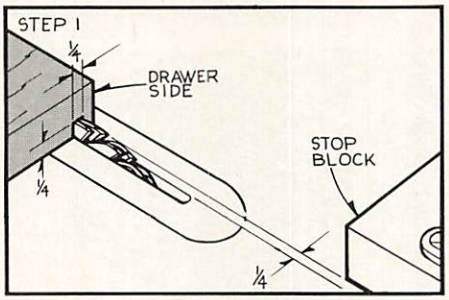

Step 2: Using the same dado head setting, cut the 1/4 in. by 1/4 in. rabbets on the ends of the drawer back. Since the stock is passed through the dado head on end, you'll need a tenon jig to provide the required support. Step 2 applies to both overlay and no-overlay drawers.

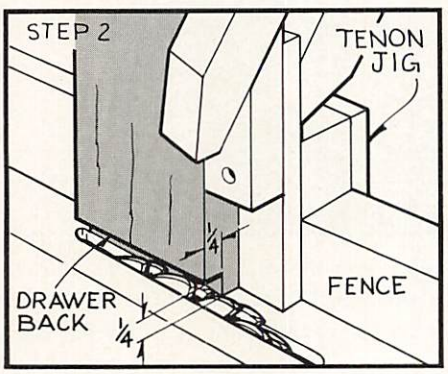

Step 3: For the no-overlay drawer, raise the dado head to 1/2 in. high and make the 1/2 in. deep dado cut on the ends of the drawer front. For the drawer with overlay, reset the dado head cutter so that the height includes the overlay dimension. On the drawer shown in Fig. 11, since the drawer front has a 1/4 in. overlay, the dado head height will be 3/4 in. In practice, it's a good idea to set the dado head height a tad higher than the specified distance to allow for sanding the end grain on the flush drawer, or cutting the bead on the lipped drawer. Remember, always support the stock with a tenon jig for cuts made with the board on end.

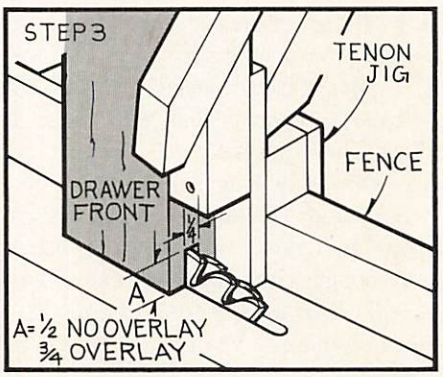

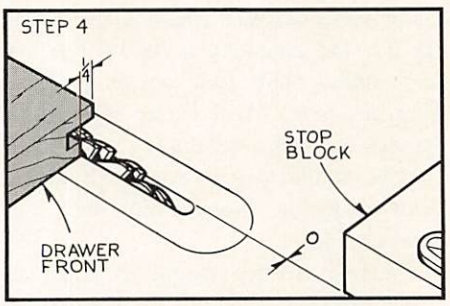

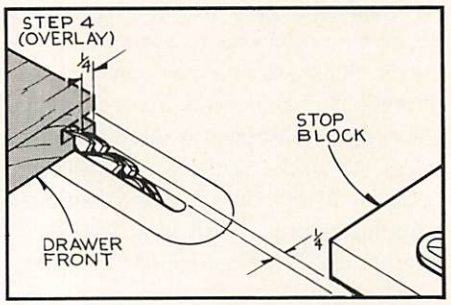

Step 4: For a no-overlay drawer, all that remains of the drawer joinery is to cut back the ends of the drawer front. Once again, set up a stopblock to index the cut, and make the cut with the miter gauge and dado head as shown. The dado head is not a must here, but since you'll need it later for the drawer bottom grooves, it doesn't make much sense to change to a regular saw blade and then change back to the dado head. If you are making an overlay drawer, you'll need to cut back the ends of the drawer front and establish the rabbet to create the lip on the top and bottom edges. Both cuts can be made with the dado head still set for the 1/4 in. wide cut. Reset the stopblock to cut back the ends (Step 4 Overlay). To cut the overlay on the top and bottom edges, remove the stopblock, reset the dado head height to 1/2 in. and locate the auxiliary fence so it just touches the dado head. If your dado head is the type that leaves points at the corners of the cut, then consider using the router table instead of the table saw for the rabbet that establishes the lip.

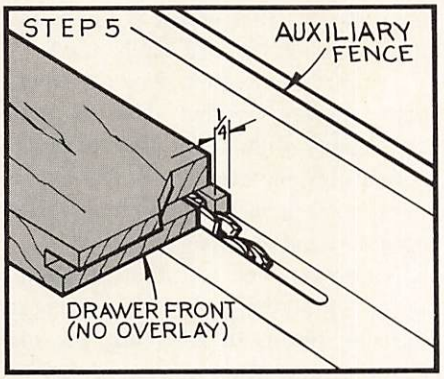

Step 5: Whether you are making the overlay or no-overlay drawer, the groove for the drawer bottom will be the same. It's made with the dado head set for a 1/4 in. wide by 1/4 in. deep cut. Locate the auxiliary fence 1/4 in. from the edge of the dado head for all cuts except on the overlay drawer front. To accommodate the 1/4 in. lip, you'll need to move the fence 1/2 in. from the dado head. The optional molded edge that we show in Fig. 11 on the overlay drawer front is best cut on the router table.

Tips

However you decide to make your drawer, sizing it for the case into which it will fit is important. Too tight a fit, and you'll find that come summer the drawer will stick. On the other hand, if you allow too much play and size the drawer too small, then it will skew sideways, catching and binding as you try to close it. So how much play should you allow? On an average-size drawer, about 1/16 to 1/32 in. across the width of the drawer should suffice. Also, be sure to size the drawer box a little less than the height of the opening. This also helps to avoid binding or sticking in humid weather. If the case sides are solid stock, then allow about 1/4 in. between the back of the drawer and the case back. Without this allowance, if the case sides contract a bit, the drawer could end up hitting against the case back. Some cabinets or chests use the back as a drawer stop, but a separate drawer stop is a better option.

Traditionally, the most a cabinetmaker might do to lubricate a drawer would be an application of paraffin on the drawer guides, frames, and on the bottom edge of the sides. Today we have some better choices. With products like Watco Danish Oil, the finish actually makes the wood harder and more resistant to wear. An application of the oil to the guides, frames, and to the drawer sides will harden the wood and reduce wear.

Another modern solution to the problem of wear is Teflon or plastic tape. Actually, these tapes can be either Teflon, polyolefin or plastic. They have an adhesive backing and are applied to the case or drawer frames at the wear points. They are extremely strong and wear resistant, and should last the life of the project. Teflon and polyolefin tapes are manufactured by CHR Industries Inc., 407 East St., P.O. Box 1911, New Haven, CT 06509-9988. Call them at (203) 777-3631 for the name of a local distributor. Plastic tape can be ordered from Meisel Hardware Specialties, P.O. Box 70, Mound, MN 55364. WWJ

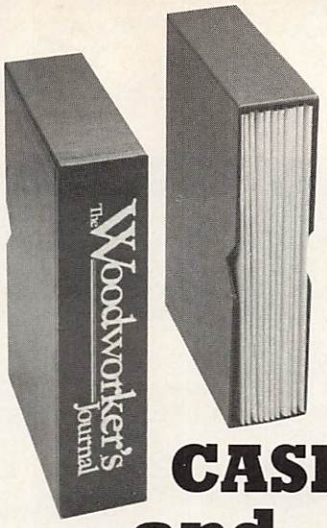

CASES and BINDERS

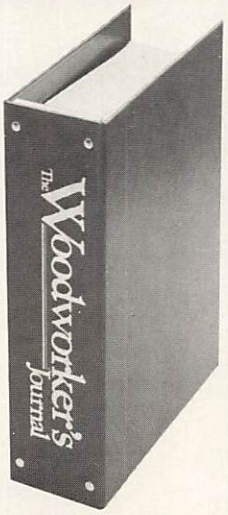

Handsome binders hold 12 issues, open flat for easy reading, and are available in two sizes: oversize for back issues up through Jan/Feb 1986; and standard size for our more recent issues from Mar/Apr 1986 on. $9.95 each or 3 for $27.95. Compact box cases also come in both sizes. $7.95 each or 3 for $21.95.

Please send your order with payment to:
JESSE JONES INDUSTRIES, Dept. WWJ
499 East Erie Ave., Philadelphia, PA 19134

Enclosed is $ _____.
Add $1 per unit Postage and Handling.
Outside U.S.A. $2.50 (U.S. currency only).
PA residents add 6% sales tax.

Specify size: ☐ Standard (Vol. 10 No. 2 - present)
☐ Oversize (Vol. 4 No. 5 - Vol. 10 No. 1)

Please send _____ Binders; _____ Cases for *The Woodworker's Journal.*
Binders: 1 - $9.95 3 - $27.95 6 - $52.95
Cases: 1 - $7.95 3 - $21.95 6 - $39.95

Name (Please Print) _____
Street _____
City _____
State/Prov. _____
Zip/Postal Code _____

Charge Orders (Minimum $15): Am Ex, Visa, MC, DC accepted. Send card name, #, Exp. date.
CALL TOLL FREE 7 days, 24 hours
1-800-972-5858

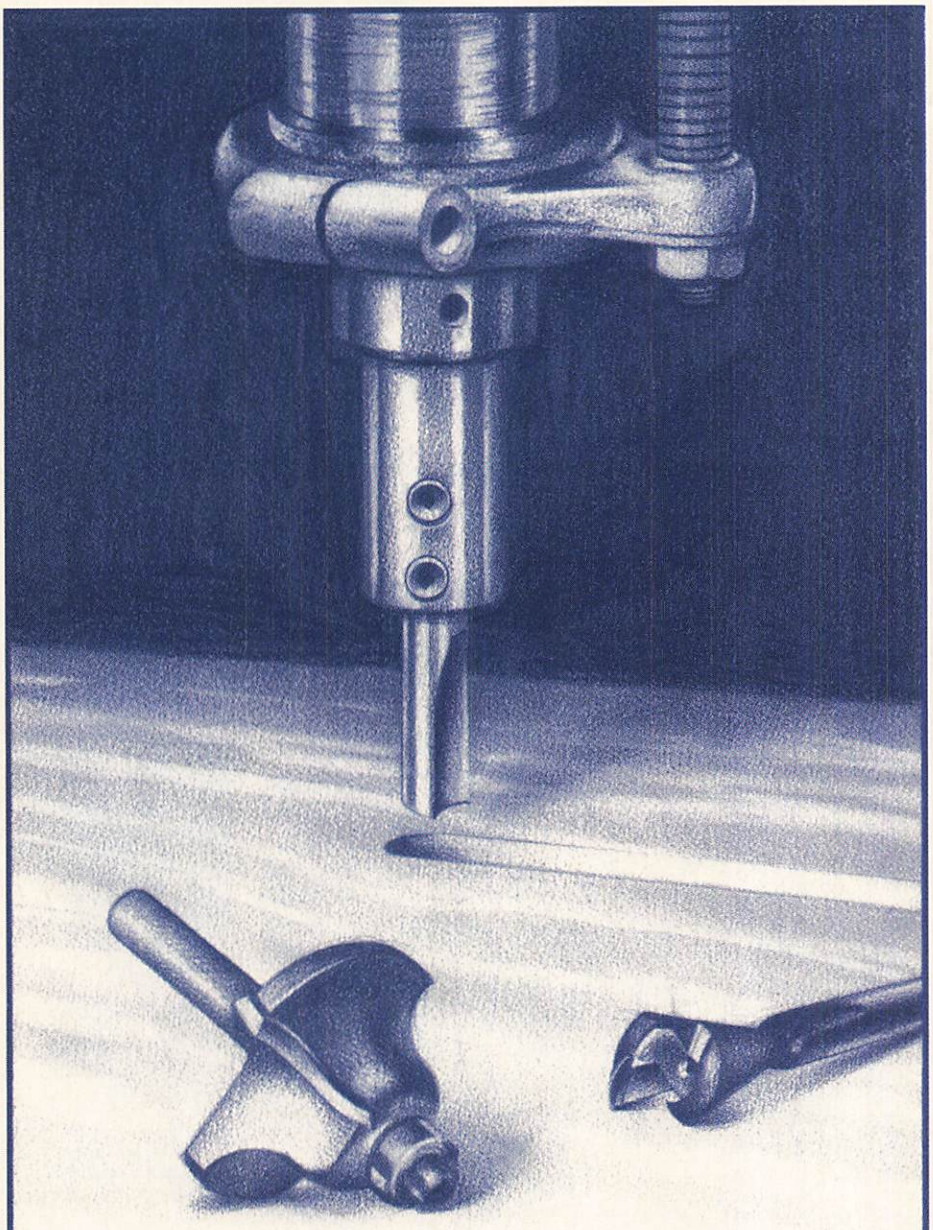

By R.J. De Cristoforo

Using Router Bits in a Drill Press

A logical question is, why consign router operations to a drill press when a portable router and a router table might be available? An appropriate answer is that the drill press setup offers many of the advantages of an overarm pin router, among them, easier work guidance and more accuracy because of greater visibility of the work area.

Case in point — when forming a mortise on a router table, the work encases the bit and it must be pressed down over the turning cutter or, in the case of a plunge router, the operator must reach under the table for the necessary adjustment while keeping the work secure. On a drill press, the workpiece is firmly held as the bit is lowered to penetrate. Also, the depth-stop mechanism on a drill press is easier to use and more clearly visible than that on an under-the-table router.

Statistics indicate that the average purchased router has a 1/4 in. capacity while the most popular drill press design will handle router chucks of 1/4 in. to 1/2 in. capacity. This broadens the assortment of router bits that can be used.

Another factor, from personal experience anyway, is that there is more opportunity with a drill press to design special jigs and accessories that lead to more convenient work-handling, better accuracy, and greater work-scope.

Moreover, one of the interesting facets of power tool woodworking is devising means of extending the machine's usefulness, providing, of course, that unusual applications are practical and can be performed without damage to the operator or the tool. Using the drill press as a power source for router bits falls into this category. Actually, the idea is not so farfetched since many manufacturers offer accessories that allow the product to be used for much more than routine drilling.

Since router bits are, essentially, side cutters, a common question is whether the application might harm spindle bearings and so void the tool's drilling

accuracy. In truth, drill presses are designed with heavy-duty ball bearings — it's difficult to find a modern one that isn't so equipped — that are specifically designed to stand up to radial loading. A drill press with its spindle turning in sleeve bearings is another story. Here, radial stresses should probably be avoided or, at least, minimized. Checking the owner's manual will reveal whether to go or not, and if there is still doubt, a call or note to the supplier will provide the answer.

How about speeds? We know that portable routers in which cutting bits are normally used, operate at high speeds: 10,000 rpm and more — revolutions not matched by a drill press with, on the average, a maximum speed that can vary from 3,000 to 5,000.

There are ways to compensate. Given a particular rate of feed (how fast the work is moved) 10,000 rpm lets the bit's cutting edges pass a specific number of times over, say, an inch of the work's edge. If the bit is spinning at 5,000 rpm, it seems reasonable that reducing the feed rate by 50 percent will allow the cutter to do as much work over the given area. So, a slower feed makes up for less speed.

It's tempting, since most drill presses have step pulleys and belt arrangements to provide various rpm, to think of pulley changes to step up the maximum speed range. This "solution" should *not* be attempted without first determining from the manufacturer whether the alteration is safe for the machine.

A second factor, which has to do with the horsepower of the tool as well as speed, is how much material can be removed in a single pass. With routine drilling, the pertinent factor is simply the diameter of the bit. With router bits, both the depth and width of the cut come into play. Determining the correct procedure involves some operational judgment. If the motor slows up drastically, or the belts slip, or it is difficult to move the work smoothly, you are cutting too deep or too wide. Warning signs that indicate you are asking too much are burn marks that will appear on the work or the cutter, and work-chatter that negates a smooth operation. The solution, of course, is to achieve the full cut by making repeat passes. For example, when a 1/2 in. straight shank bit is being used to form a 1/2 in. deep groove, make one cut 1/4 in. deep, then finish the job after lowering the bit an additional 1/4 in.

The technique may not always be necessary, but when needed it will avoid stressing the machine and will result in smoother work.

Organizing

Setting up for drill press routing is not complicated, but efficiency and safety call for some special considerations. For one thing, since router bits work in a way that produces side thrust, they should be gripped in a special chuck used in place of the conventional three-jaw unit (Photo 1). Delta calls the unit a spindle adapter, Craftsman calls it a holding collet chuck.

Photo 1

Some operators ignore this rule, but it's not a professional way to go, and the replacement unit doesn't cost much. The accessory, however, is not interchangeable among different machines, so obtain one from the maker of your drill press.

The drill press is probably the least guarded of all power tools. This may not be a problem during routine boring operations, but for the various routing chores that can be done, some safety precautions are necessary. My machine is equipped with the see-through safety shield that is detailed in Fig. 1. It's not difficult to make and well worth the effort.

The shield, which is adjustable vertically, locks to a bracket that is secured with the same bolt that tightens the casting for the depth-stop rod on my Delta drill press (Photo 2). Aluminum, which is readily available in 1/8 in. by 1

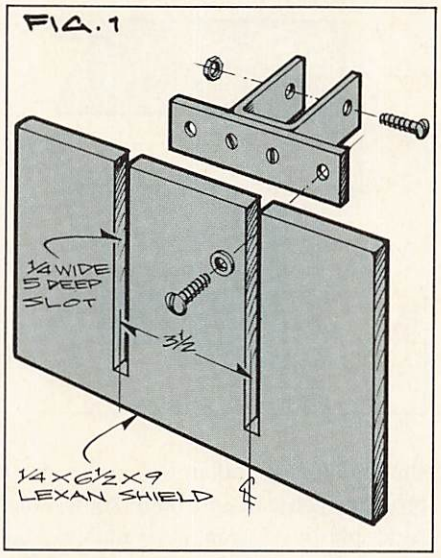

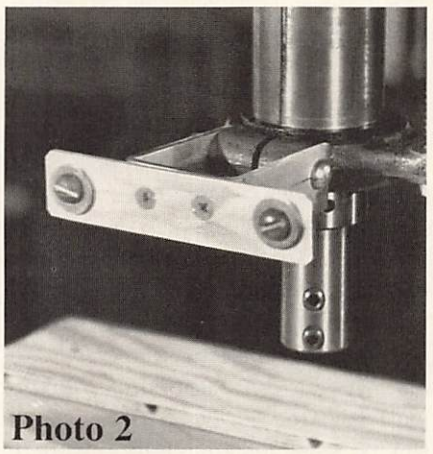

Photo 2

in. straps, has sufficient strength for the part and is easily bent to shape. Check the machine before doing any bending since you'll need to customize the bracket to fit on your drill press. Lexan, a clear plastic, is a good material for the

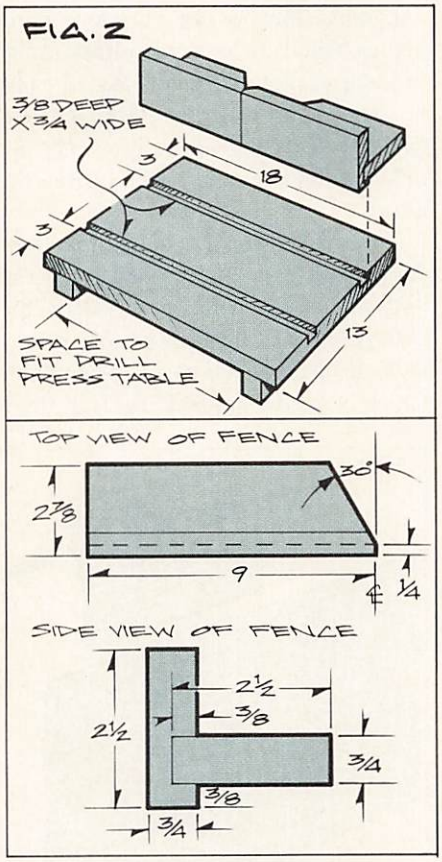

shield, but if obtaining some is a problem you can substitute some other rigid plastic. Lexan is available from Trend Lines, 375 Beacham St., Chelsea, MA 02150; 1-800-877-7899.

A Jig to Make

Routing is done in various ways — straight-line work against a fence, freehandedly, miter-gauge feed, even by pivot-guiding for circular cuts. To be prepared efficiently for all phases, it's a good idea to make the special table that is detailed in Fig. 2. We say "make" because ready-made ones are not available. The fence, made from plywood or particleboard, is a two-part affair, so it can be used for straight-line work or separated to provide room for a cutter. In use, a C-clamp at each side secures the fences to the jig-table, and the assembly to the drill-press table. Clamps are situated behind the fences so they don't interfere with operations. Again, you'll need to customize the jig to fit your drill press.

The complete routing setup consists of the special chuck, the jig-table and fences, the safety shield, and an on-hand miter gauge or one that you buy for the purpose.

A Word About Router Bits

The router bits used in a drill press are the same as those used in a portable router. But for woodworkers not used to router operations, a review of the types available is in order. For the purposes of this article, router bits can be categorized as follows: straight shank bits of various diameters that do not require pilots and which are used for cuts like grooves, dadoes, mortising, and to some degree, for rabbeting; all-steel profile bits with integral pilots, although some are available with ball-bearing pilots; profile bits with carbide-tipped cutting edges with, usually, ball-bearing pilots.

A straight-shank bit tells its own story, forming a vertical-side U-shape with a flat bottom. Profile bits produce decorative edges: among them, coves, ogees, rounded edges, chamfers, bead-and-cove and so on.

An important point is the difference between integral and ball-bearing pilots. Integral pilots turn with cutting edges at the same speed. Thus, since workpieces bear against them to control cut-width, there can be enough friction to cause burning or indenting of the work-edge. This negative factor can be avoided when doing straight-line routing against a fence since fence placement can be set so the pilot does not bear against the work; only the profile edges will make contact.

Ball-bearing pilots turn independently of the bit's cutting edges. They turn only at the speed with which the work is moved. Thus, they gauge the cut-width but without creating friction. Many bits of this design can be fitted with ball bearings of various diameters so you can choose, within limits, a particular width of cut.

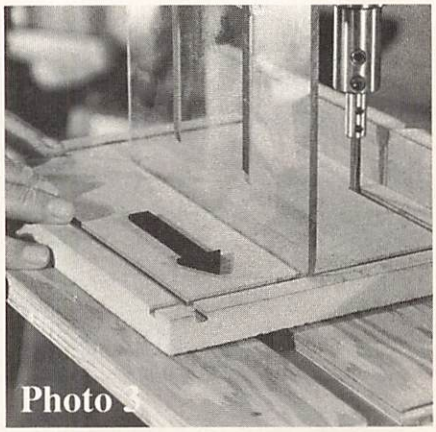
Photo 3

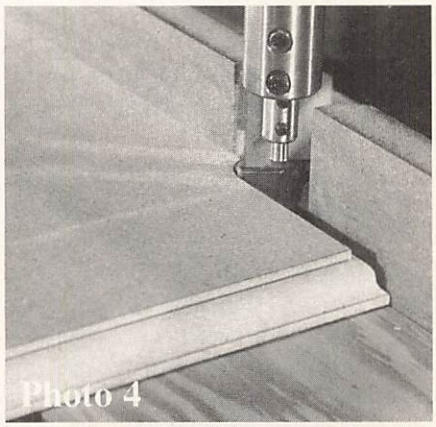
Photo 4

These pilot factors apply mostly to freehand edge-routing — those applications where cut-width is controlled by the pilot.

At Work — Straight-Line Routing

Those who use a router table will notice that the setups used here are essentially the same. But now the bit is on top of the work where you can easily see what's happening and control the cut. And now you can easily start and stop plunge cuts with the drill press handle.

Straight-line routing, when the cut is away from the work's edge, is accomplished by butting the jig's fences so they offer an unbroken plane. The auxiliary table is situated to provide the correct edge distance (Photo 3). Cutters in a drill press rotate clockwise so work

is moved from left to right and the action of the cutter will tend to keep the work against the fence. If the work is moved "with" the cutter's rotation, the opposite would tend to happen.

Hold the work firmly down on the table and snug against the fence throughout the pass. Situate the safety shield so it bears lightly on the workpiece. In addition to protection, it will serve, to some degree, as a hold-down.

Shaped edges are produced in a similar fashion, but with the fences spaced to provide room for the cutter (Photo 4). Always situate the fences so the gap is just wide enough for the bit in use. You'll notice that the groove in which the fences ride also provides room for the bit's pilot. Thus, there is flexibility for cutter-height, and bits with integral pilots can be used without the possibility of burn marks since the pilot will not contact the work.

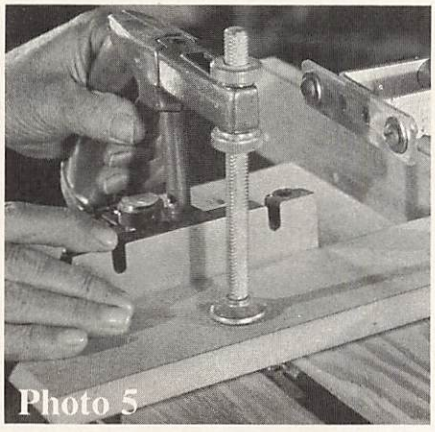
Photo 5

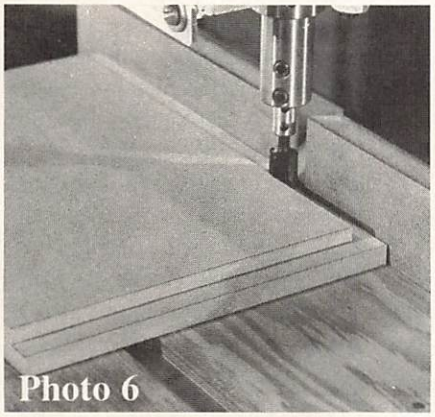
Photo 6

When shaping is done cross-grain, it is inevitable that some splintering or feathering will occur at the end of the cut. Therefore, when shaping two or more edges, do the cross-grain cuts first; the following with-the-grain cuts will remove whatever blemishes have appeared.

Never try to shape narrow pieces. If you need slim molding, do the work on stock that is wide enough for safe handling, then rip off the part you need.

Also, don't hand-feed narrow stock that requires end-shaping. It will be difficult, let alone hazardous, to try to keep the work against the fence and to move it smoothly across the fence-gap. Use a miter gauge; and if the unit can be equipped with a hold-down, so much the better (Photo 5).

Some Joint Work

Routing techniques can be used to produce an impressive number of joint forms. Accuracy is, of course, important so setups must be organized very carefully.

There are many lengths and diameters of rabbeting bits designed for portable routers that can be used on the drill press. The operation is straight-line work with the jig-table situated for the rabbet's width (Photo 6). If the width is greater than the cutter's capacity, readjust the jig and make an additional pass.

Round-end mortises can be produced accurately and efficiently with straight-shank bits (Photo 7). Keep the jig-fences butted, and clamp an additional "fence" to the table to accommodate the thickness of the stock. Thus you have an alley that will insure accurate work-feed. Straight bits are available in various diameters, so it's likely there will be one to suit the mortise width that is needed. Since mortises are usually deep, achieving full depth will probably require repeat passes. Remember that work is always moved from left to right, so that each pass is started at the right end of the mortise.

Open-end mortises are made the same way, except that the workpiece is moved directly into the cutter. Clamp a thin strip of wood to the jig-fence as a stop to gauge the length of the mortise (Photo 8).

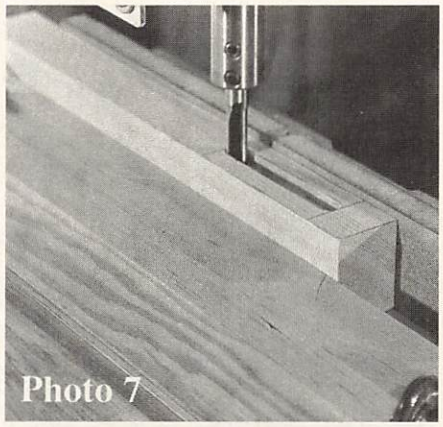
Photo 7

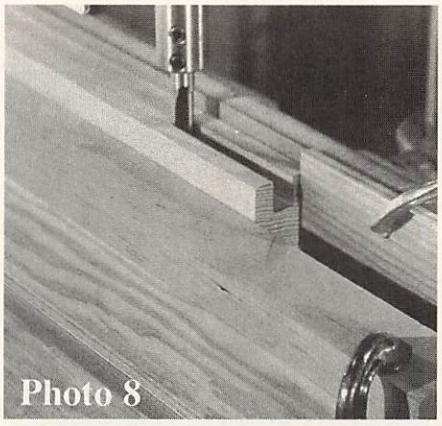
Photo 8

Tenons for round-end mortises must be rounded off to suit, or the mortise-ends can be squared by doing some hand work with a chisel. You'll find the rounded mortises save a lot of time, since it only takes a moment to round the tenons to match.

Making Dovetails

Forming dovetail slots is another practical application. The procedure is simply straight-line routing with the bit's height above the table adjusted for correct depth of cut (Photo 9). Repeat passes won't work here, so the shape must be achieved right off. There is a solution, though, if there is a problem. First use a straight bit of suitable diameter to run a groove down the

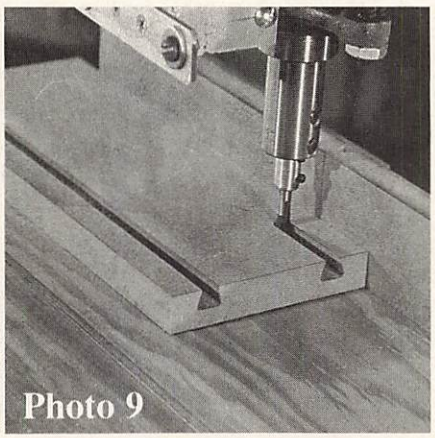
Photo 9

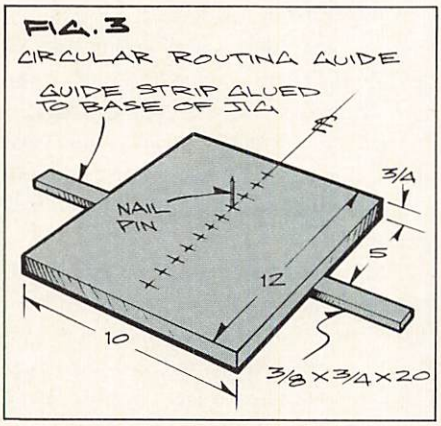

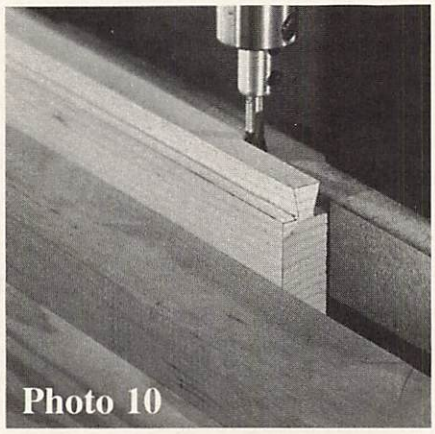
Photo 10

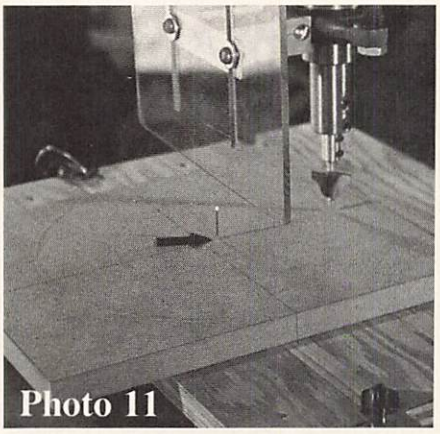
Photo 11

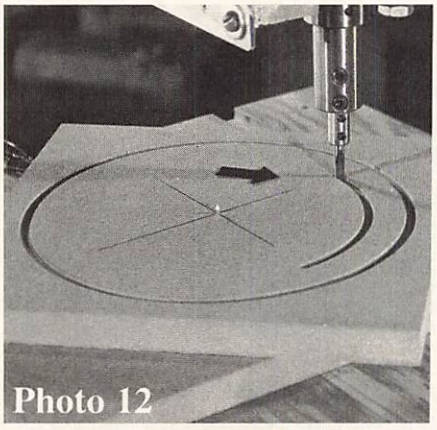
Photo 12

center line of the cut. Then, switch to the dovetail bit to complete the job.

Forming the matching ''pin'' is accomplished as shown in Photo 10. The jig is set so the bit will form one side of the pin. A second pass is made to complete the form after the work has been turned end-for-end. Clamp a second fence to the jig so the work can be moved without a wobble. One of the passes will be made against the grain, so work slowly; allow the bit to cut at its own pace. To be sure of accuracy, make trial cuts on scrap before working on good stock. For running dovetails it's especially important that the cuts be accurate, so the workpieces don't bind during assembly.

Make a Circular Routing Guide

The circular routing guide, detailed in Fig. 3 and shown in Photo 11, is an accessory for the router table. The technique is simple; workpieces of almost any shape are impaled on the pivot (a nail) and rotated slowly against the cutter's direction of rotation. There is much flexibility in terms of work-size and cut-radius since the jig-table is movable and the pivot can be situated in any of the holes in the pivot guide. Example applications are internal cuts like the grooves being formed in Photo 12, and edge shaping on disks shown in Photo 13.

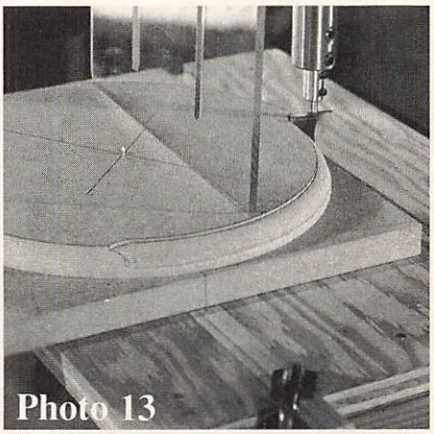
Photo 13

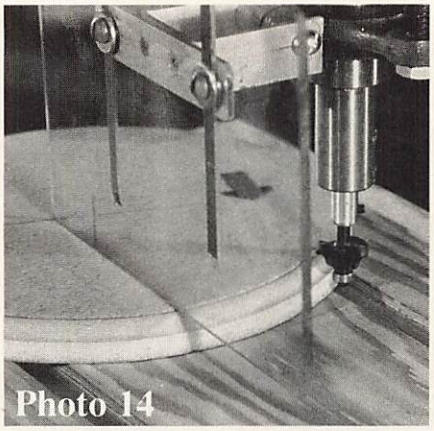
Photo 14

When you wish to avoid a hole through the stock (for the pivot pin), drill a blind hole and use a short nail or cut one to length. Using a ball-bearing bit, instead of the jig, also eliminates the hole through the stock (Photo 14). But that only works for edge shaping.

Use a very firm grip when doing this kind of work since the cutter will volunteer to turn the work on its own. This ''anti'' action will be more obvious during circular edge-shaping operations. Always use the safety shield, and place it on the work to supply some hold-down action. WWJ

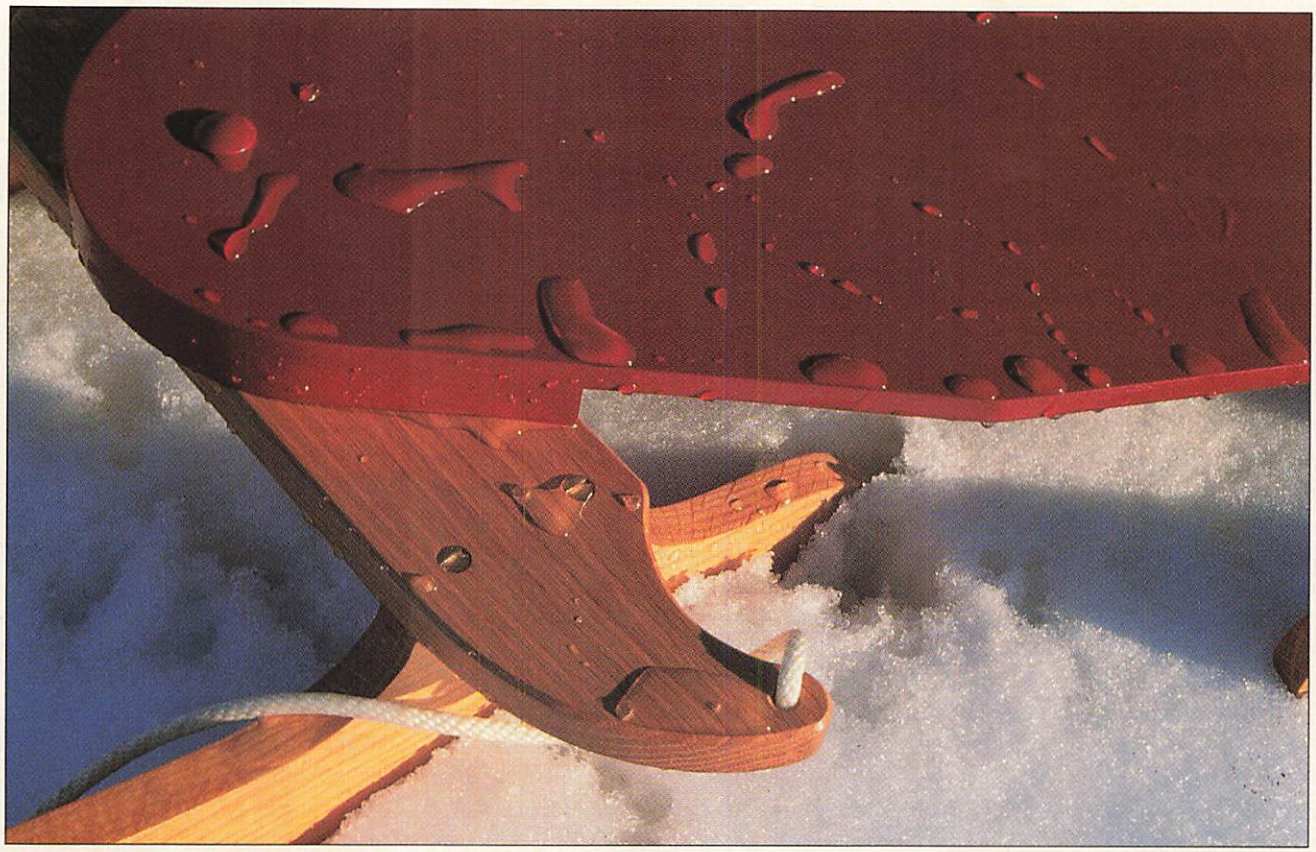

Finishing Outdoor Projects

by Jim Barrett

The main challenge to the maker of garden furniture and outdoor wood projects is to protect the wood from the ravages of an outdoor environment — blistering sun, rain and snow, radical temperature extremes, decay-causing organisms, and wood-boring insects. And, how to do this while creating a pleasing finish. Indoor furniture will remain more or less unchanged in appearance and structural integrity for a hundred years with relatively little surface protection and maintenance. But outdoor furniture won't last more than a few years without a wood preservative treatment combined with a durable exterior surface finish.

This article includes an overview of the various wood protection products and finishes suitable for outdoor furniture and related projects. We've broken these down into five general categories: wood preservatives and water repellents, exterior stains, clear finishes, penetrating oils, and exterior paints. Within each category, there are dozens of variations, and in the case of stains, clear finishes, and paints, hundreds of brand-name products which vary in specific formulations, price, and performance. We realized early on that it would be nearly impossible to test and report on every product suitable for outdoor use, so we've opted to describe the general characteristics and application methods of each basic type. Also, because most paint and finish manufacturers tend to distribute their products on a regional or local basis, products available in one area won't be available in another. This being the case, you'll need to do some additional homework based on the products available in your area, by writing or calling various companies for product literature and specific application data. We do mention several nationally available products as examples; the names and addresses of the companies are listed on page 29 if you want further information on the products mentioned.

Why Outdoor Wood Needs Protection

In order to choose the appropriate type of preservative treatment and finish for your outdoor project, it helps if you know how weather affects the wood and exactly what you'll need to protect the wood against.

The two greatest enemies of outdoor furniture are moisture and sunlight. Moisture affects wood in two ways: First, when wood gets wet, it expands;

when it dries out, it contracts. This continual process causes it to warp, check and split. Under constant exposure to severe conditions, these forces can literally wrench your project apart. Moisture also fosters the growth of decay-causing organisms — mold and mildew. These organisms secrete enzymes that break down the wood fibers, resulting in decay. Sun and wind dry out and evaporate the natural resins in wood that protected it from moisture while the tree was alive. Sun also bleaches the wood surface, turning it gray. In addition, wood left outdoors is much more susceptible to wood-boring insects, such as carpenter ants, termites, and the wood-hungry larvae of various beetles and moths.

The heartwood of redwood, red cedar and Southern cypress are often used for outdoor projects because they're naturally decay resistant — to a point. Even these woods require additional protection against the elements if you expect the project to last more than five years or so.

No single type of outdoor wood preservative, sealer or exterior finish will protect wood against all of these damaging effects — at least not for very long. In most cases, you'll need to use a preservative treatment in addition to an exterior finish, or a product that combines both, to provide maximum weather protection and obtain the desired finished appearance. But even the best products, or combination of them, won't last forever. Whereas the paint job on your house may last 10 to 15 years, you can expect to renew the surface finish on outdoor projects every three to five years (depending on local climate) to maintain a protective barrier against the weather. Unlike house siding, which is often protected by a roof overhang, outdoor furniture, planter boxes, decks, fences, and the like, are often directly exposed to the weather. Also, horizontal surfaces such as bench and table tops, are more susceptible to the effects of sun and moisture than vertical surfaces. Of course, you can prolong the life of your outdoor furniture by putting it under cover or indoors during the winter months when it's not in use.

Wood Preservatives & Water Repellents

Two basic types of products are used to protect wood prior to finishing — wood preservatives and water repellents. Wood preservatives contain chemicals that make the wood resistant to decay and wood-boring insects. Traditional wood preservatives include creosote, pentachlorophenol (penta) and copper napthanate. The first two are highly toxic and should not be used on furniture or projects that will come in contact with people, plants, or animals. Copper napthanate is nontoxic when dry, but stains the wood green.

Note: Many wood preservatives, and some paints, stains and other outdoor finishes contain mildewcides and other chemicals that have a low toxicity when dry. In spite of the low toxicity they can cause skin irritation, or can be harmful when ingested, and therefore are not suitable for furniture such as chairs or picnic tables (or other surfaces that may come in frequent contact with bare skin or where food will be served). For such projects, use a final finish whose label reads "nontoxic when dry." If you're in doubt, contact the manufacturer for more information.

Most lumberyards sell dimensional lumber that has been pressure-treated with wood preservative. The lumber is rated either for ground contact or aboveground use, according to the amount of preservative infused into the wood. The wood will last 50 years or more outdoors, but limited sizes and an often unattractive surface appearance make most pressure-treated lumber unsuitable for use in many outdoor furniture projects. Also, most pressure treated lumber is not recommended for direct contact with skin or food products, and should never be used for furniture. It is fine for planter boxes (just don't grow vegetables in them) and other projects where skin contact is not likely.

Although wood preservatives protect wood against rot and insect attack, the wood will still absorb moisture, making it subject to warping, checking and splitting when it dries out. Water repellents, such as Thompson's Water Seal, protect the wood by penetrating the surface and forming a barrier against water penetration. Once the barrier coat is broken, though, the wood underneath is subject to decay, unless it has been treated with a preservative.

Rather than applying a preservative and water repellent in a two-step process, it's much easier to use a one-step wood treatment product that contains both, such as Thompson's Wood Protector or Seasonite. Some wood treatment products also contain ultraviolet absorbers (UVAs) that retard the graying effect of sunlight.

If you like the look of natural wood, and want to leave the project unfinished, you should still protect it from the weather with a wood treatment. The wood will eventually turn dark or light gray from sun exposure, but you can slow down this process by adding a small amount of semitransparent oil-based stain to the treatment, matching the wood color as closely as possible. A clear, exterior penetrating oil finish, or clear finish such as CWF (Clear Wood Finish made by the Flood Company) will provide further protection and impart a matte sheen to the wood (see Penetrating Oils, page 28).

Otherwise, apply the wood treatment before painting or staining to provide additional protection. Apply several light coats to all surfaces of the furniture or project, especially to joints prior to assembly. If the project is already assembled, coat all exposed surfaces, letting the liquid penetrate cracks and joints to protect end grain. For even penetration, the wood should be dry and sanded lightly to remove glazed surfaces caused by milling. Some wood treatment products leave a waxy buildup on the surface if you apply too much, which prevents even penetration or adhesion of stains and finishes. If the wood does not absorb the liquid within 10-15 minutes, move the excess to another area or wipe it off.

In some cases, you'll need to allow the wood to "weather" for one season (about six months) before you apply a stain or other penetrating finish. Also, the wood treatment might not be compatible with the finish you've chosen. Read the label instructions on the wood treatment and finish containers before you buy them for information on compatibility and application details. If you're still in doubt, contact the manufacturers of both products.

Once again, remember to avoid any products that include chemicals that still have some toxicity when dry. If you have any doubts about the safety of a product, it's better to use a finish that you are certain is safe, rather than take chances.

Exterior Stains

Two basic types of exterior stains are available — alkyd (oil-based) and acrylic (water-based). Generally speaking, alkyd stains provide a deeper, more even penetration than acrylic stains, making them easier to control, especially on nonporous woods. Acrylic stains, on the other hand, tend to be slightly more durable and longer-lasting, and cleanup is easier. Both types will require re-application every two or three years to maintain the original color, depending on the severity of the climate. In terms of protecting the wood itself from the damaging effects of weather, neither type has a clear-cut advantage. The pigments in both types protect the wood from the bleaching effect of the sun. Some alkyd and acrylic stains on the market also contain wood preservatives (mildewcides) and water-proofing agents. We recommend using one of the "preservative stains" over an ordinary alkyd or acrylic stain.

Exterior stains are available in semi-transparent and solid colors. Semi-transparent stains allow some of the wood grain and color to show; solid color stains completely hide the color and grain pattern, but not the texture of the wood. Several manufacturers we spoke with advised against using solid color stains on outdoor furniture such as tables, benches and chairs, because the surface eventually turns chalky and the stain pigment rubs off on skin and clothing. As with other penetrating finishes, the wood must be clean and dry. Sand all surfaces lightly to remove glazed or shiny spots caused by milling.

Test the stain on an inconspicuous area to see how it reacts with the wood and to make sure the color you chose is

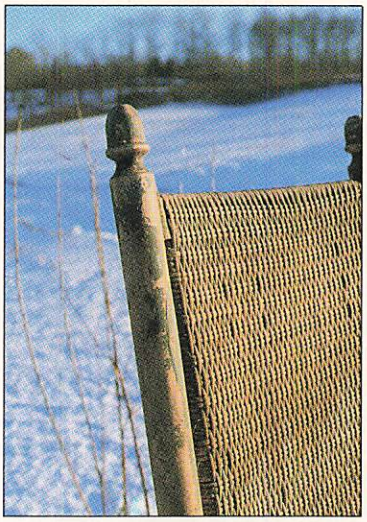

An outdoor environment can take its toll.

the one you want. If the stain penetrates unevenly, or not at all, the wood is probably too wet or over-saturated with a preservative or water repellent. If you suspect the latter, allow the wood to weather outdoors for at least six months, then apply the stain during the summer when the wood is completely dry.

If you're applying the stain outdoors, avoid direct sunlight or windy conditions. Apply stain to the ends of boards first, then to the faces. To avoid lap marks, start at one end of the surface and apply the stain in relatively short strokes, or "takes," to maintain a wet leading edge (the faster the wood absorbs the stain, the faster you must work to avoid lap marks). If the stain is not being completely absorbed by the wood, brush it out vigorously to prevent buildup. In other words, do not soak the surface with stain and leave it. Applying two thin coats provides better protection than one thick coat, and assures a more even color.

Stains used by themselves generally produce a flat or matte finish (some oil-based stains may retain a slightly oily appearance for several months after application). For a natural oil finish, you can mix an oil-based stain with an exterior penetrating oil finish, such as Varathane Natural Oil Finish #66, or use an exterior stain/finish, such as Watco Exterior Wood Finish. If you want a gloss or semi-gloss finish, you can cover the stain with a clear finish, such as spar varnish or exterior polyurethane. Again, check with the manufacturers of both products to make sure the stain and clear finish or penetrating oil you're using are compatible.

Clear Finishes

For many years, exterior marine spar varnish was the only clear surface finish suitable for outdoor use. Today you have two other options — exterior polyurethanes and exterior clear latex (acrylic or vinyl acrylic) finishes.

Spar varnishes are a mixture of natural oils (including tung oil) and phenolic resins. They come in interior and exterior grades. Exterior or marine-grade spars are also referred to as long-oil varnishes, because they contain slow-drying solvents that allow deeper penetration into the wood, providing greater protection against the elements. Select a varnish formulated specifically for exterior or marine use.

The one drawback to spar varnishes and other clear surfaces finishes is that they don't offer as much weather protection as exterior stains or paints. Exterior stains and preservative-stains protect the wood by penetrating deep into the wood fibers; paints protect wood by forming a thick protective barrier coat. Spar varnishes provide a relatively thin barrier coat and don't penetrate as deeply as stains. If you've ever used a spar varnish or polyurethane, only to have it fail after a few months, you probably didn't apply enough — most manufacturers recommend applying at least three coats to bare wood. Because you have to let spar

varnish dry 6 to 24 hours between coats, the procedure can be tedious, indeed! We suggest that you also treat the wood with a preservative/water repellent, or good exterior preservative/stain before applying the varnish. As with other finishes, make sure products are compatible. Before applying spar varnish, make sure the surface is clean, dry, and free of dust, grade marks, mildew or other foreign matter. Fill cracks and nail holes with a patching compound or wood putty colored to match the wood. Sand the surface lightly to remove rough spots and wipe with a tack cloth to remove any sawdust.

Spar varnish is best applied with a high-quality, fine-bristle varnish brush. Coat all surfaces, including the ends and undersides of boards. Because formulations vary, follow label directions for specific application instructions. Some spar varnishes require thinning with mineral spirits before use; others don't. Most require a light sanding with fine-grit paper between coats.

Exterior polyurethane finishes provide a durable gloss or semi-gloss finish for outdoor furniture, but the surface film is generally less flexible than that of a spar varnish. Wood expansion and contraction caused by an outdoor environment makes the finish craze, or develop tiny cracks. Actual formulations vary between manufacturers, so some types are less prone to crazing than others. Also, polyurethanes can't be used over stains or preservative treatments that contain waxes, stearates, or silicones. The manufacturer can recommend an appropriate stain to use with their polyurethane. If you do go with a polyurethane, make sure it's formulated for exterior use. Apply at least three coats, following label directions.

Clear latex finishes formulated for outdoor use are a relatively recent development. Although not as durable as spar varnish or polyurethane, their fast dry time and water cleanup make them much easier to use. Clear latex dries to a semi-gloss or satin finish, and won't yellow or darken as spar varnish and polyurethane do. However, the finish may take on a cloudy or blushed appearance when exposed to high moisture (rain, fog, dew) at low temperatures. The finish turns clear again when temperatures rise and the moisture dissipates.

As with the other clear finishes, apply at least three coats, covering all surfaces. Fill all cracks and nail holes with a water-based spackle or filler tinted to match the wood. Clear latex finishes are compatible with water-based stains and many oil-based stains.

Compared to exterior paints and stains, clear exterior finishes provide relatively little protection from damage caused by ultraviolet rays. Spar varnishes and polyurethanes also have a tendency to yellow or darken over a period of time. Some formulations contain ultraviolet absorbers (UVAs) to help resist these effects. Another problem with clear surface finishes is that because they require frequent reapplication (every two or three years), the finish coats tend to build up quickly. Ultimately, this buildup creates a surface that's a real hassle to prepare for further varnishing or painting.

Unless you're set on a gloss or semi-gloss clear finish, go with a stain, paint, or penetrating finish for projects that will remain outdoors year round. We recommend spar varnishes, exterior polyurethanes, and similar clear exterior finishes for furniture that will be situated in a relatively protected area, such as under a porch roof, and can be stored under cover during the winter months.

Penetrating Oils

Most penetrating oils used for interior furniture, such as tung oil, Danish oil, or lemon oil, provide little protection for outdoor furniture. If you want a "natural" oil finish, select a penetrating finish formulated for outdoor use. Watco Exterior Wood Finish (natural), Varathane Natural Oil Finish, Deks Olje or CWF from the Flood Company, are several examples. Some of these products can be mixed with stains or tints to produce a stain/finish. Usually, the penetrating oil itself provides a certain measure of protection against moisture. Some also contain wood preservatives, UVAs, mildewcides, or water repellents, or combinations of these. You'll need to do some homework before buying a particular penetrating oil finish to determine if additional protection is required. Follow manufacturer's instructions for mixing with stains or tints.

Exterior Paints

The two most commonly used exterior paints for outdoor projects are alkyd (oil-based) and acrylic or vinyl acrylic latex (water based). They're available in flat, satin or eggshell, semi-gloss and gloss. We recommend a gloss or semi-gloss enamel for most projects because it's easier to keep clean and has less tendency to chalk. The price and quality of alkyd and latex exterior paints vary considerably, and manufacturers often carry several lines. We suggest that you buy a "premium" grade exterior paint —the top of the line. As mentioned, outdoor projects generally take more of a beating than house siding, and many of the less-expensive "house and trim" paints just won't last. However, several coats of a premium-quality house-and-trim paint, such as those "guaranteed to last 15 years" will probably hold up five years or so on a picnic table, planter box, or birdhouse exposed directly to the elements.

One-hundred percent acrylic latex paints tend to outlast vinyl acrylic latexes. Modern synthetic alkyd paints outlast the old-fashioned linseed-oil based alkyds, and have a faster drying time. Some premium synthetic alkyd paints also contain silicone for extra durability. In terms of performance and durability, a top quality paint of either type (latex or alkyd) offers similar performance and durability.

The type of paint you choose — acrylic latex or alkyd — is mostly a matter of personal preference, with one exception. Exterior latex paints contain plasticizers, used to keep them soft and "elastic" after they're dry. During warm weather, you may notice that the paint feels sticky or tacky. (Vinyl acrylic

paints show this characteristic more than pure acrylic paints). For this reason, you should not use latex paints on chairs, benches, tables, or horizontal surfaces on which you'll be putting heavy objects.

To extend the life of any paint job, first apply a high-quality primer that's compatible with the paint you're using. Surfaces should be dry and free of dirt, grease, resins, mildew, and other foreign matter. Smooth or glazed surfaces should be roughened with 150- or 180-grit sandpaper to provide "tooth" for good adhesion. After applying a good primer to all surfaces, give the project two or three heavy coats of paint. To assure that all surfaces are fully protected, we prefer to prime all pieces and give them one coat of paint before assembly, then apply two more finish coats after assembly, letting the paint fill in cracks and joints where pieces meet.

Note: Redwood, red cedar, knotty pine and other "bleeding" species may require an additional coat of primer to seal them. Latex primers are usually more effective than oil-based primers for this purpose. Pigmented shellac also works well. After applying the primer, wait 48 hours, check for bleeding, then apply additional coats, if necessary.

Helpful Tips

Selecting Wood: Although practically any wood species can be used for garden furniture and other outdoor projects, softwoods such as pine, redwood, cedar, and fir are usually preferred because they're less expensive than hardwoods and accept preservatives, paints and stains more readily. Teak, oak and mahogany have long been popular hardwoods for trimming boats, and make striking outdoor furniture, as well. (Open-pored woods such as oak and mahogany should be filled with a paste wood filler prior to staining or finishing).

No matter what type of wood you choose, though, make sure it is completely dry before applying a finish. We suggest using a select grade of kiln-dried or thoroughly seasoned lumber for garden furniture and other small projects. Although green or "garden grade" lumber is often less expensive, and fine for fences and decks, it's usually inferior in quality, and contains a high percentage of moisture and resins that can affect the penetration of preservatives and finishes. Also beware of lumber that has been left outdoors in the lumberyard. Choose dry pieces. If you suspect a high moisture content in the wood, allow the completed project to "weather" or dry out for at least one month outdoors during sunny weather before applying a preservative or finish.

Black stains on wood are an indication of mildew. If these are present, you'll need to remove all traces to prevent further growth. Make a solution consisting of 1 quart chlorine laundry bleach, 2/3 cup trisodium phosphate (TSP), and 1/3 cup powdered laundry detergent, mixed with enough hot water to make one gallon of solution. (Do not mix bleach with detergents that contain ammonia.) Wearing rubber gloves and safety goggles, apply with a stiff bristle brush, rinse lightly with warm water, and dry with rags or old towels. Allow the wood to dry completely before applying preservative or finish.

Fasteners: Use galvanized or stainless steel fasteners and hardware. Ordinary steel or iron fasteners will not only rust, they may discolor some finishes. It's also a good idea to set all nails and countersink screws, soak the holes with a wood treatment product (preservative/water repellent), let dry, then fill with putty or wood filler before finishing.

Coated screws are another option you may want to consider. They're now recommended for use in pressure treated wood instead of galvanized screws, which have been found to react with some of the pressure treating chemicals.

Source List

The following companies distribute clear exterior finishes, exterior stains and wood preservative products on a national basis. As mentioned earlier, most paint and varnish companies distribute on a regional or local basis only, so you'll have to choose among brands available in your area.

Behlen's (Mohawk Finishes)
Rt. 30 N. Amsterdam
New York, NY 12010
Phone: (518) 843-1380
Spar Varnish

Deft, Inc.
17451 Von Karmen Ave.
Irvine, CA
Phone: (714) 474-0400
Interior/exterior polyurethane

The Flecto Company, Inc. (Varathane)
1000 45th St. Oakland, CA 94604
Phone: (415) 655-2470
Clear and pigmented polyurethanes, "spar-type" exterior varnishes (Varathane No. 92 and 93)

The Flood Company
P.O. Box 399 Hudson, OH 44236
Phone: (800) 321-3444
Clear Wood Finish (CWF), Seasonite, Deckswood wood restorer

The McClosky Corp.
7600 State Road
Philadelphia, PA 19136
Phone: (215) 624-4400
Exterior stains, spar varnish

Minwax (Thompson & Formby Corp.)
15 Mercedes Drive
Montvale, NJ 07645
Phone: (201) 391-0253
"Helmsman" spar urethane

Olympic Stain
2233 112th Ave. N.E.
Bellevue, WA 98004
Phone: (206) 453-1700
Semi-transparent exterior stains

Thompson & Formby
825 Crossover Lane
Memphis, TN 38117
Phone: (901) 685-7555
Thompson's Water Seal, Wood Protector

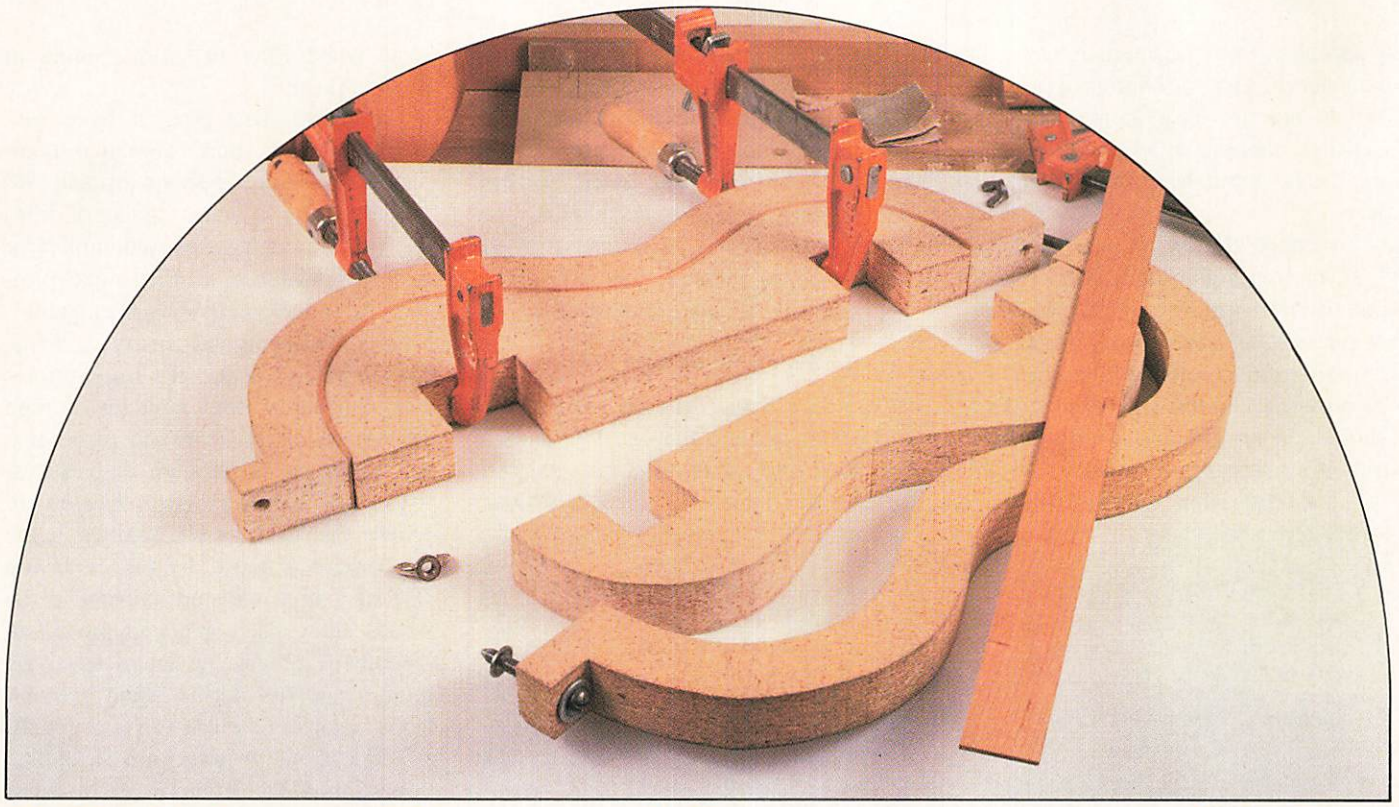

Making Curved Instrument Sides

Making curved instrument ribs, or sides, seems more complex than it is. All you really need is a few tools, a home oven and a little know-how. With those ingredients you can make ribs for the Folk Fiddle on page 51, or for other instruments such as dulcimers and guitars.

Volumes have been written on bending wood. The process can require exacting calculations and use expensive equipment capable of generating large quantities of steam under tightly controlled conditions. But we have good news. The thin wood used for most instrument ribs is so flexible that you can bend it without elaborate equipment. All you need is some plywood or particleboard for a mold and an ordinary kitchen range.

The system used here works because traditional steam-bending techniques depend more on the heat generated by the steam than they do on the moisture contained in the steam. The moisture in a steam box doesn't penetrate more than a fraction of an inch into the wood. That's essentially why green wood bends easier than dry wood. The heat penetrates and heats up the water already in the wood fibers. (If the wood is too dry, no amount of heat or steam will soften it soon enough for a steam box to be effective.)

But instrument sides are so thin that the wood is bent easily by moistening (not soaking) the wood, and then heating it. The moisture in this case does penetrate much of the way into the ribs, because the pieces are so thin. It also keeps the wood from drying out during the heating.

The ribs will require two pieces of hardwood (cherry, maple, birch or walnut are good choices). For the Folk Fiddle we started with stock 1/16 in. thick by 1 3/16 wide by 20 in. long. The wood should be planed or sanded smooth on all sides before you begin. Using the grid pattern supplied with the Folk Fiddle on page 56, construct a mold in which to bend the ribs (Fig. 1).

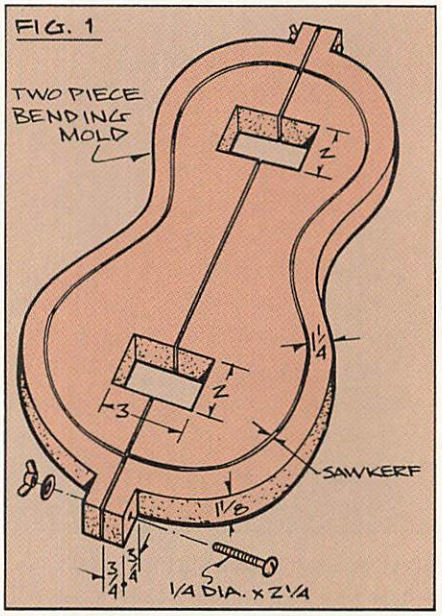

For the ribs of another instrument the technique is the same; only the pattern and mold thickness vary. For the Folk Fiddle, you will need to use plywood or particleboard 1 1/8 to 1 1/4 in. thick by 11 in. wide by 18 in. long. You can

laminate two pieces of particleboard or plywood to get the thick stock. First, rip the mold blank in half, fit the halves back together and draw a full-scale rib outline centered in the blank. You now have the layout for two half-molds.

Carefully cut out the two shapes on the band saw, saving all the pieces. Go slow on this master cut; you need to be accurate. Then cut the outside curve leaving the tabs at the end as shown in Fig. 1. Drill 1/4 in. diameter holes in the tabs. Also cut the inside notches, which provide purchase for the clamps. (Note that the outside curve and the bolts used to hold the assembly together are added to give the mold a professional appearance and for easy storage.)

With an oven handy, you're now ready for bending. Wet one rib thoroughly, and carefully place it between the two halves of one side of the mold. With two clamps, slowly draw the two pieces of the mold together, with the rib blank between them (Fig. 2). Then repeat the procedure for the other rib.

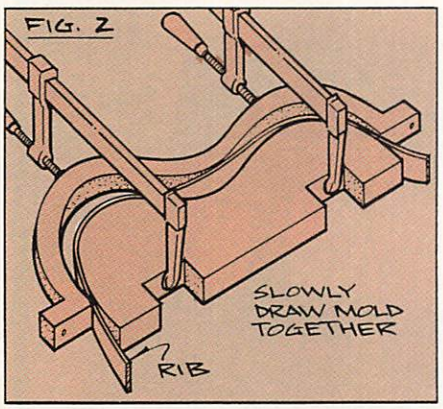

Then both ribs — molds, clamps and all — should be put into the oven of your kitchen range, preheated to 200 degrees. After the oven has been cooking for 30 minutes, turn off the heat, but do not open the oven door for another half hour. At the end of the hour, remove the structure from the oven, and before opening the mold, trim off the excess rib ends with a fine toothed saw or a sharp knife. Remove the clamps and take the finished rib halves out of the molds.

Because the ribs are so thin, it is necessary to glue wooden strips called linings along the inside of each rib. These linings should be 1/16 in. thick and 1/4 in. wide. Bend them in the oven with the same mold used for the ribs. Also use the same time and oven settings you used for the ribs. Four 1/4 in. wide lining strips will do the job. But don't glue in the linings until the rib halves are joined, and the blocks are glued in.

Make the two end block blanks of soft wood, like pine. For the Folk Fiddle, each blank should be 1 1/2 thick by 2 in. wide by 1 3/16 in. long. (The grain should run perpendicular to the grain of the ribs.) To join the rib halves into one unit, make sure the lengths are the same, and that the ends are square and true. Use masking tape to hold the ends together, taping only on the outside, so as to allow glue to be used on the inside. The tape should also prevent glue getting through to the outside during the block setting process.

With the rib halves taped together, stack the ribs upon the end block blanks leaving the larger portion of each block inside, and with each block centered upon the join-line. With a sharp pencil, draw the curve of the rib pattern upon the top of the block blank (Fig. 3).

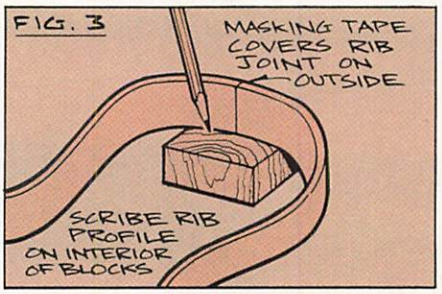

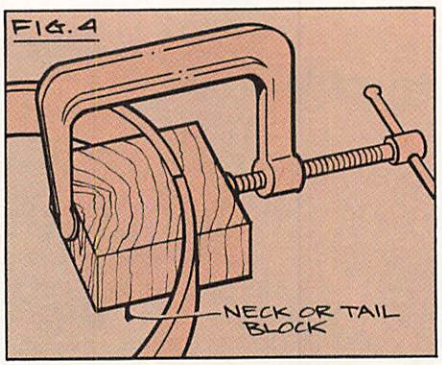

Carefully band saw along the pencil line, and save both halves of each block. Now set the block blanks back in place, with the inner block being glued to the inside of the rib, and the outer block being used as a mold while clamps are applied to hold each end block in place (Fig. 4). Use white or yellow glue.

After one hour, remove the clamps, discard the outer blocks, remove the tape, and trim the length of the lining strips so that they fit along the inside of each edge of the ribs. Now, glue the lining strips in place, using spring

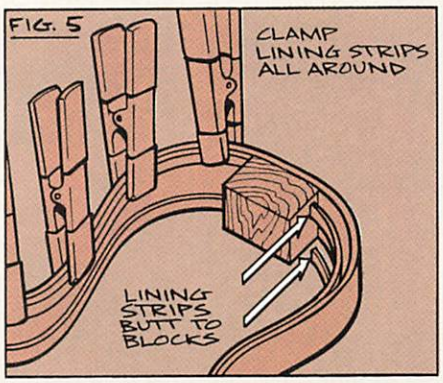

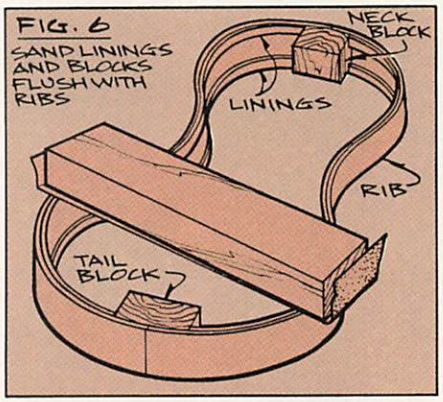

clamps or spring clothespins (Fig. 5). Note that you can slightly adjust the shape of the fiddle when gluing in the lining strips. If the fiddle ribs tend to spring back a bit after bending, you can use slight clamp pressure to bring them back to shape while gluing in the linings. Once the glue dries on the linings, the fiddle shape will be set.

After the glue dries, sand the top and bottom of the rib assembly to make sure that the ribs, lining strips and blocks are flush (Fig. 6). You now have a completed set of ribs.

Santa Fe Bench

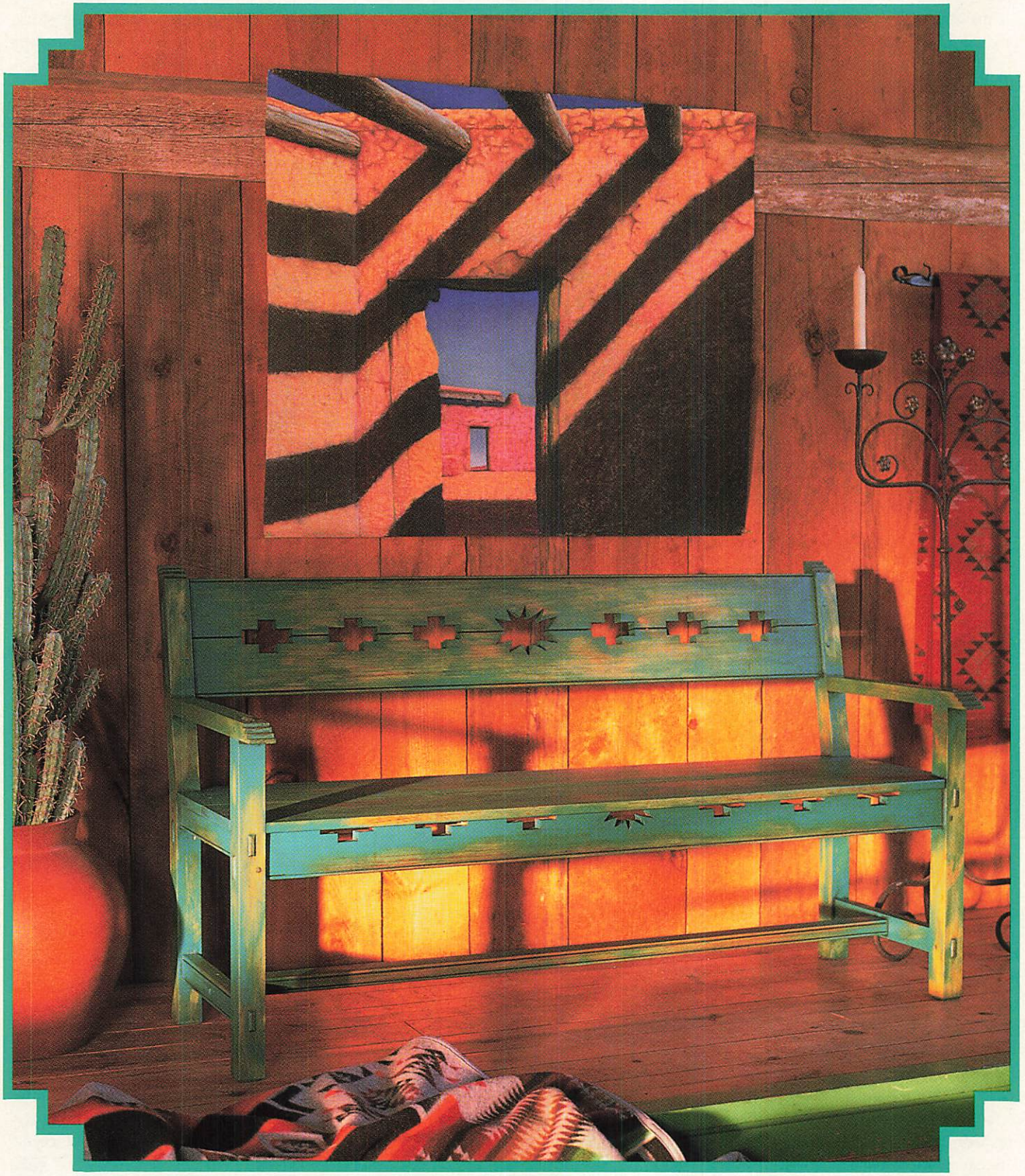

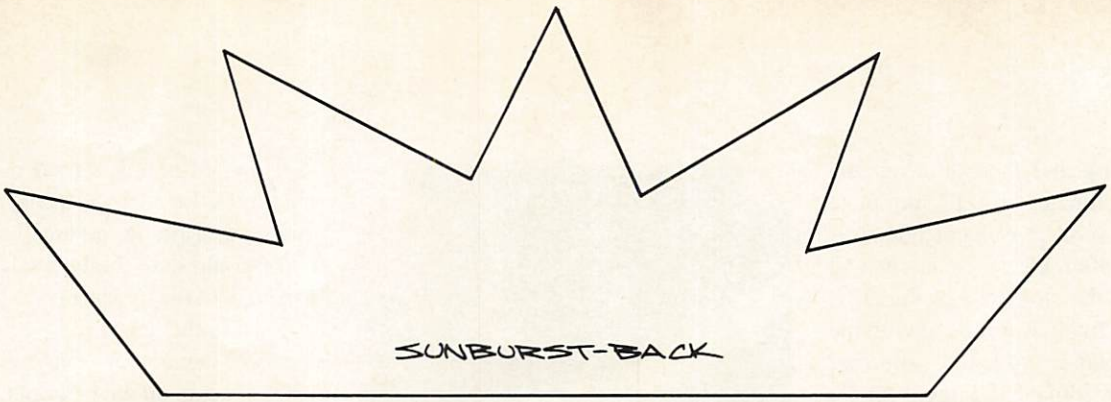

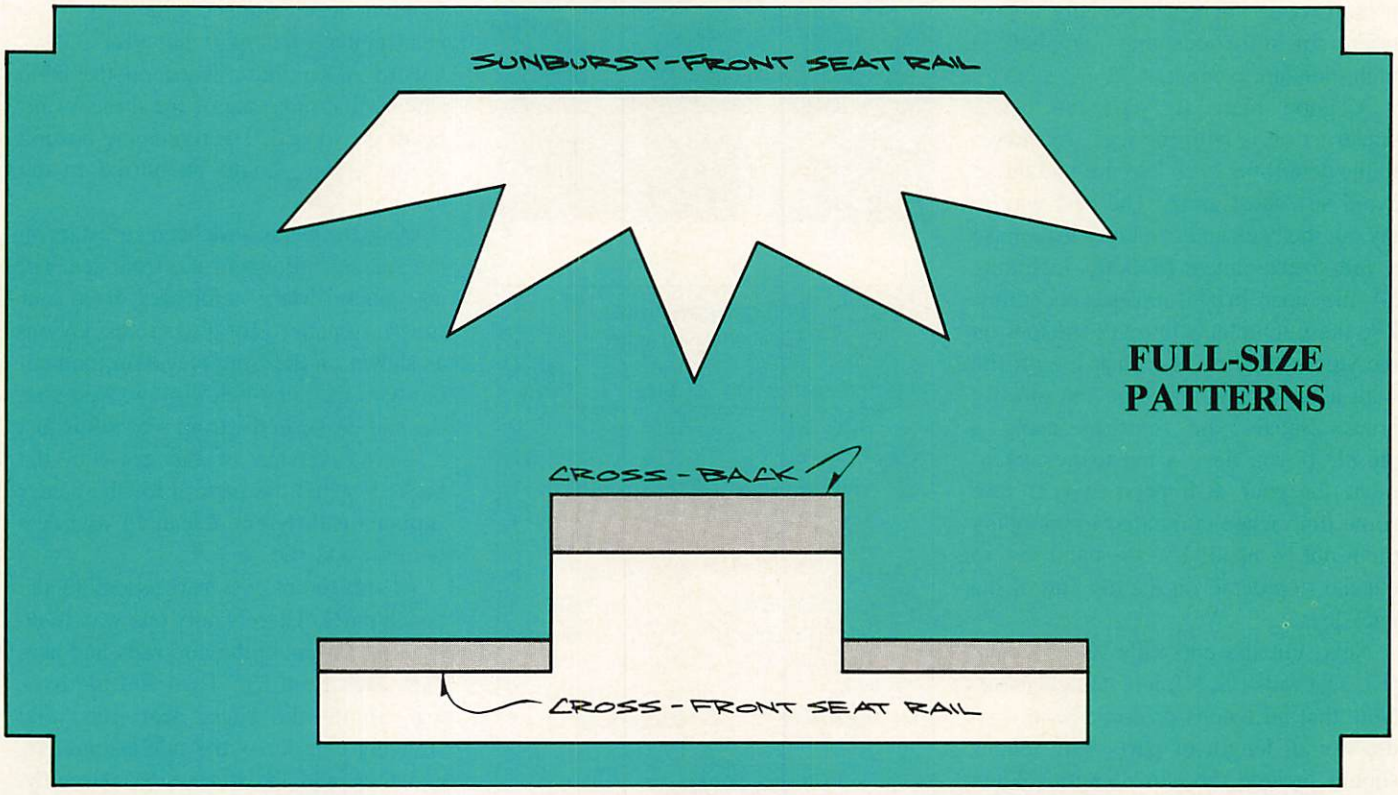

The contemporary Santa Fe style of furniture is a blend of the early Mission, Spanish, and Arts and Crafts styles. Antiques from the Spanish and Mission periods in the Southwest are typically utilitarian pieces, built of pine and featuring pegged mortise-and-tenon joinery. Much of the contemporary Santa Fe style carries over this flavor, using simple joinery and gaily painted surfaces to achieve a roughly-made, folksy, Southwestern look.

Well-designed, well-constructed furniture in the Santa Fe style can be a pleasant break from both traditional and modern furniture styles. Our Santa Fe style bench, made entirely of pine, utilizes the classic pegged, through mortise-and-tenon joint. Its brightly painted finish makes this a piece that one decorates a room around. Later on we'll explain how we achieved the bright turquoise color on the bench. For a more subtle look, you can always substitute a natural pine finish for the painted look.

Since the finish will pretty much obscure the wood, there's no reason to spend top dollar for your materials. By carefully selecting boards and framing stock from your local lumberyard, you should be able to build the bench for about $50. The 1 1/4 in. thick parts can be obtained from two-by stock, and the legs (A, B) can be cut from four-by-fours. You'll need a four-by-four that measures at least 3 5/8 in. wide to get the 10-degree angle on the back leg, but if the four-by-four you get only measures 3 1/2 in. wide, don't worry. No one but you will ever know the difference. A jointer and a surface planer will reduce the two-by and four-by stock to the thicknesses indicated in the Bill of Materials. Note that the back (F) is actually a single board that's ripped in half. A two-by-ten board will yield the required width. You can purchase 3/4 in. thick pine boards for the seat (J).

Take care that the lumber you buy is not too wet, or you may experience problems as it dries. Your best bet is to buy from a yard that stores its material in barns or sheds, as opposed to outside where it's at the mercy of the elements. To minimize the likelihood of problems later on, it's usually a good idea to sticker and dry the wood inside for several weeks before you use it. Run all the stock through the planer or across the jointer to achieve approximate thickness and width, but leaving a little extra.

By thicknessing and then allowing the wood to acclimate, you'll minimize problems of wood movement that usually crop up after the wood is cut and planed. After the stock has acclimated, you'll make a final clean-up cut with the jointer and planer. Actually, allowing the stock to acclimate is a good tip for whatever stock you buy, be it hardwood or softwood, but it's especially appropriate for softwoods that may have a high moisture content.

A good place to start the bench construction is with the legs. As shown in the detail, the back legs are laid out to avoid any short grain. The best way to lay out the back and front legs is to make a full-size template of both, including all the appropriate mortise locations. Use these templates to mark the legs on the stock, then cut the back leg profile with a band saw, and bore the mortise holes. Square the mortises using a chisel. If you have a mortising attachment for your drill press, you'll save some time when compared to chopping them out by hand. Use the band saw to cut the step detail on the top end of the back legs.

Next, cut the end rails (C, D), arm (E), seat rails (G, H), and stretcher (K). Note that all tenons protrude 1/8 in., so the overall length of parts with tenons should include the extra length. When cutting the tenons, don't forget to add the 1/8 in. that the tenon protrudes through to your setting for the shoulder cuts.

We cut the tenons on the table saw, using a miter gauge and the dado head. Before working on your project stock, be sure to check the blade height setting by first cutting a trial tenon on some scrap. If your mortises are a consistent width, and your stock is all the same thickness, one setting should suffice for all the tenons except those on the front leg and arm. Since the tenons are all 1/2 in. wide, and they're all cut on 1 1/4 in. thick stock, the blade height setting is 3/8 in. The key to cutting these tenons at the same setting is to make certain that all the 1 1/4 in. thick stock measures the same. Sending it through the planer at the same setting is the usual way to achieve consistent stock thickness. If you don't have a planer and have to work with stock that varies a little in thickness, then consider each tenon as a separate operation, and set your blade height to reflect the stock thickness.

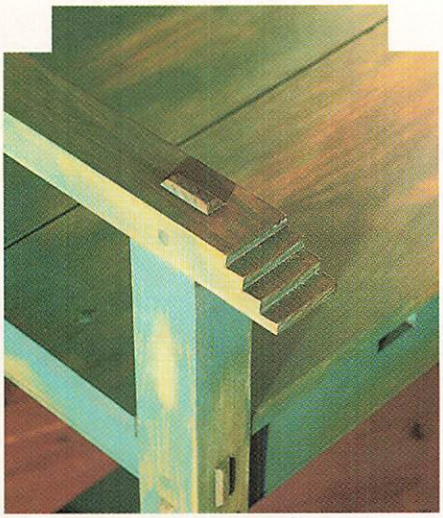

Bill of Materials
(all dimensions actual)

Part	Description	Size	No. Req'd.
A	Back Leg	See Detail	2
B	Front Leg	1 7/8 x 2 x 24 3/4*	2
C	End Rail (Top)	1 1/4 x 2 x 18 1/4*	2
D	End Rail (Bottom)	1 1/4 x 2 x 18 1/4*	2
E	Arm	1 1/4 x 1 7/8 x 21 3/4*	2
F	Back	1 1/4 x 9 x 60* **	1
G	Seat Rail (Back)	1 1/4 x 3 1/4 x 60*	1
H	Seat Rail (Front)	1 1/4 x 3 1/4 x 60*	1
I	Crosstie	1 1/4 x 3 x 16***	2
J	Seat	3/4 x 8 15/16 x 59 3/4	2
K	Stretcher	1 1/4 x 2 x 59 3/8*	1
L	Cleat	1 x 1 1/4 x 6	4

* Length includes tenons.
** Width dimension is before back is ripped in half.
*** Includes dovetails.

Allow some extra length for the arm. Note that the tenon on the back end of the arm, where it fits through the back leg, will have a 10-degree shoulder, matching the 10-degree tilt of the back. The side shoulders of the tenon are established by angling the miter gauge 10 degrees, while the top shoulder is cut with the table saw blade tilted 10 degrees. The steps on the arm ends are cut with the band saw.

Once all the mortises and tenons are cut, cut the back (F). If you start with a two-by-ten board, which measures 1 1/2 in. thick by 9 1/4 in. wide, after thicknessing, ripping in half, and jointing you would have the two halves perfectly sized. Cut the tenons on the back ends as shown in the detail.

You should now cut the bead detail that appears on the end rails, back, front seat rail, and stretcher. We used a Sears molding head equipped with their three-bead cutter (their part no. 9BT 2352). Set up an auxiliary fence on the table saw so that only one of the three 1/4 in. beads is exposed. The remaining portion of the cutter should be buried in the auxiliary fence.

Once the beads have been cut, start on the various cutouts in the front seat rail and back. Make templates from our full-sized patterns of the cutouts; lay out as shown on the front elevation, and cut out with the hand-held jigsaw. Note that the half cross on the front seat rail is just a shorter version of the cross in the back, but that the pattern for the center sunburst is different. Clean up your cuts with a wood file.

At this point you can assemble the bench parts. There's only one way to do it. First assemble the end rails and arm onto each front leg. Then add the back leg. Mount the back, seat rails, and stretcher into one of the side assemblies, and then add the other side assembly. Note that we included two dowel pins to keep the halves of the back in register, and wedges on either end at the through-tenon to maintain the 1/8 in. space between those halves (see back tenon detail). Use a dab of glue to hold the wedges.

We don't use glue on any of the through mortise-and-tenon joints. Instead, the joints are secured with pegs. Make your own pegs from scrap. The traditional method is to hand-split the pegs. Since wood splits follow the grain, the peg grain will be a true long-grain, yielding maximum strength. You can use dowels instead, but you won't get that nice square-ended detail that our pegs display.

We achieve the square peg ends by rounding most of the peg length, but leaving the end that will show square. Use a drop or two of glue on the pegs,

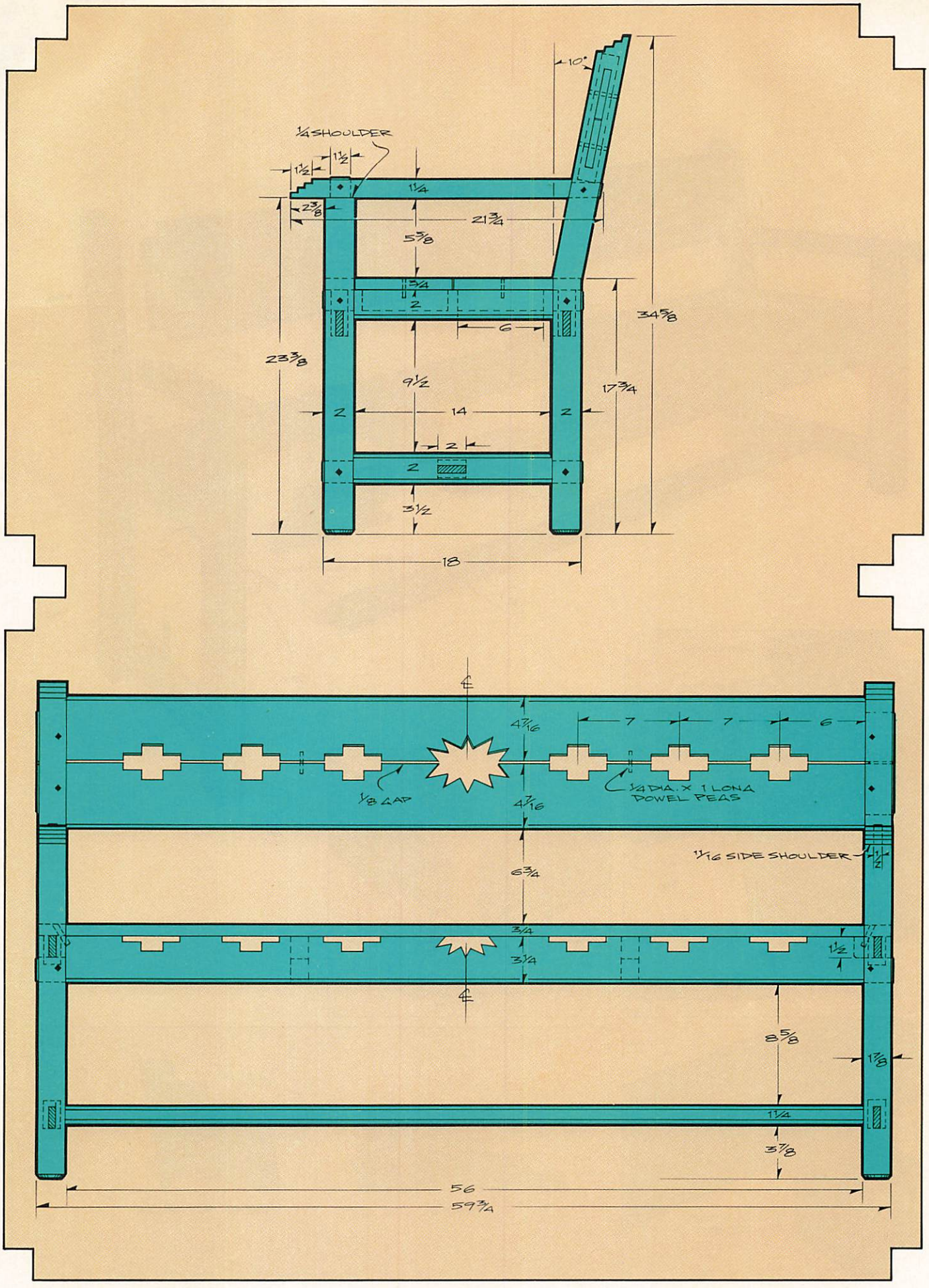
10°
¼ SHOULDER
1½
1½
1¼
2⅜
21¾
5⅜
¾
2
6
34⅝
23⅜
9½
17¾
2
14
2
2
2
3½
18
℄
4⅞16
7
7
6
⅛ GAP
¼ DIA. X 1 LONG DOWEL PEGS
4⅞16
11⁄16 SIDE SHOULDER
6¾
¾
3¼
1½
8⅝
1⅞
1¼
3⅞
56
59¾

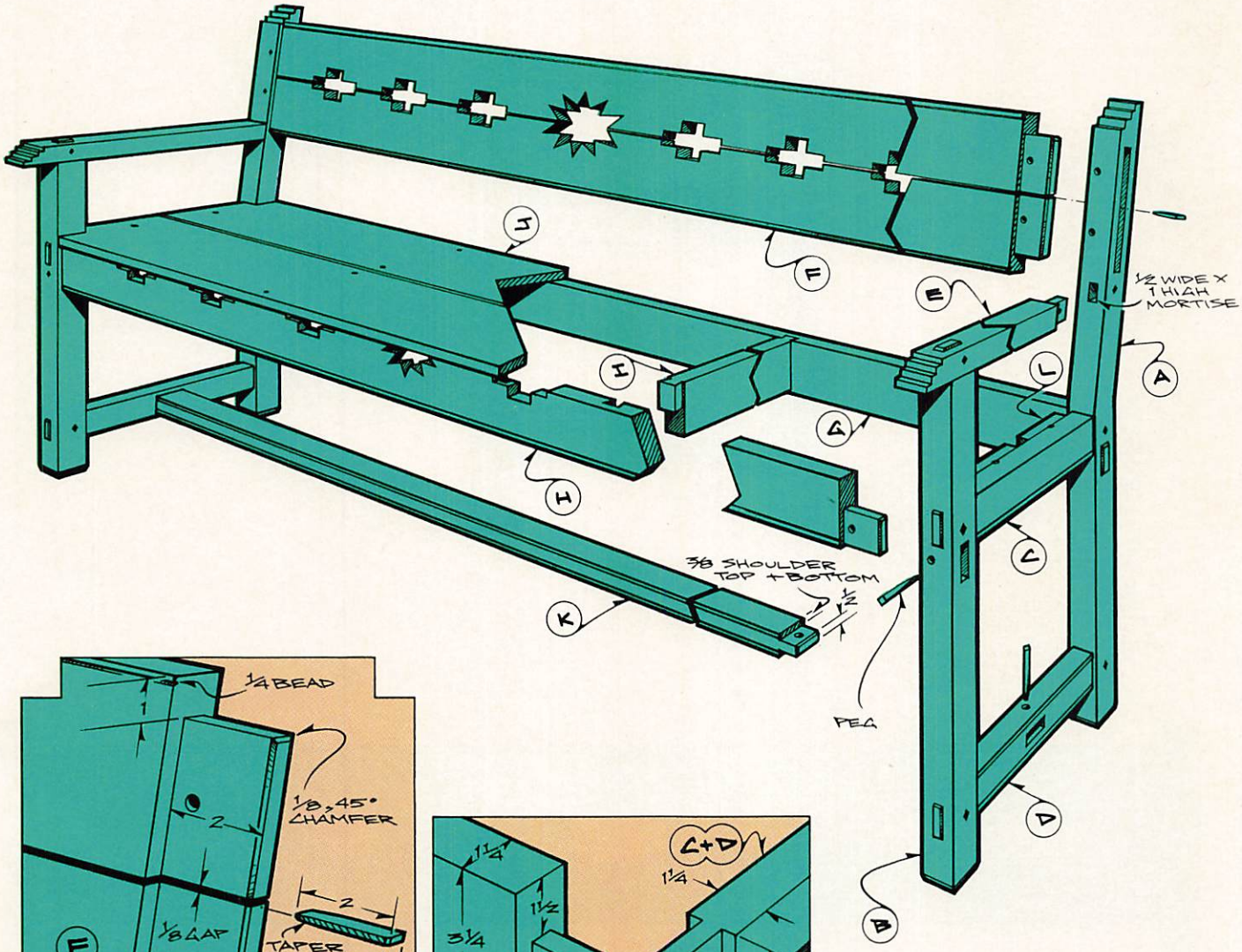
J
F
E
½ WIDE X 1 HIGH MORTISE
I
L
A
G
H
C
3/8 SHOULDER TOP + BOTTOM
½
K
PEG
D
B

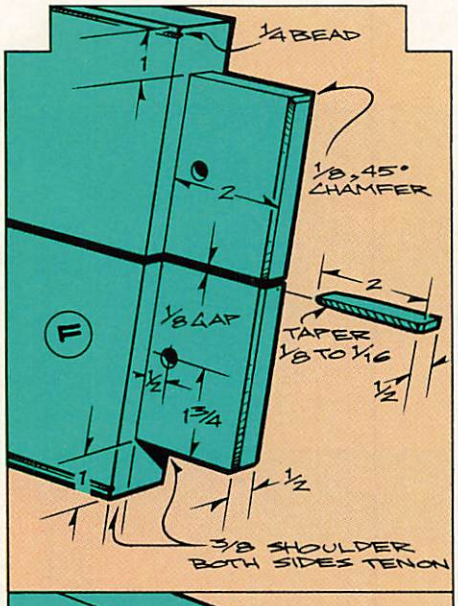
¼ BEAD
1
⅛ 45° CHAMFER
2
F
2
TAPER ⅛ TO 1/16
⅛ DAP
½
1¾
½
1
3/8 SHOULDER BOTH SIDES TENON

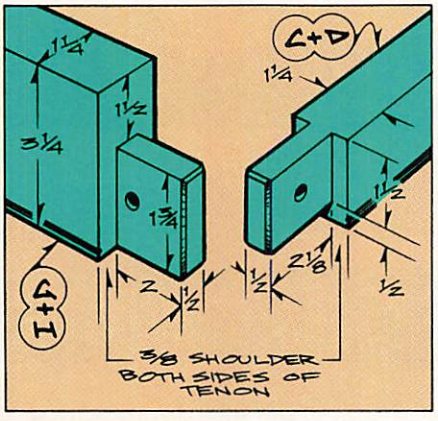
C+D
1¼
1¼
1½
3¼
1¾
I+J
2
½
2⅛
½
1½
3/8 SHOULDER BOTH SIDES OF TENON

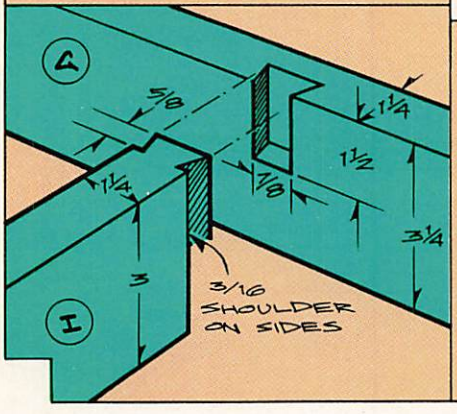
G
⅜
1¼
1¼
1½
⅞
3¼
3
I
3/16 SHOULDER ON SIDES

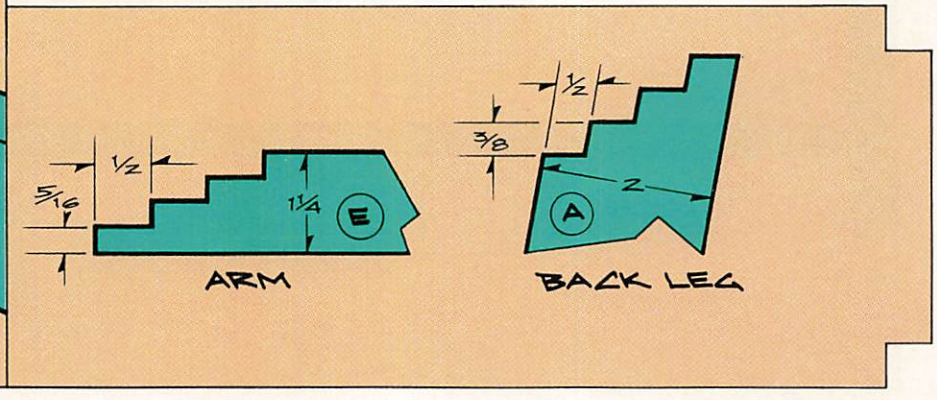
½
5/16
1¼
E
ARM
½
⅜
2
A
BACK LEG

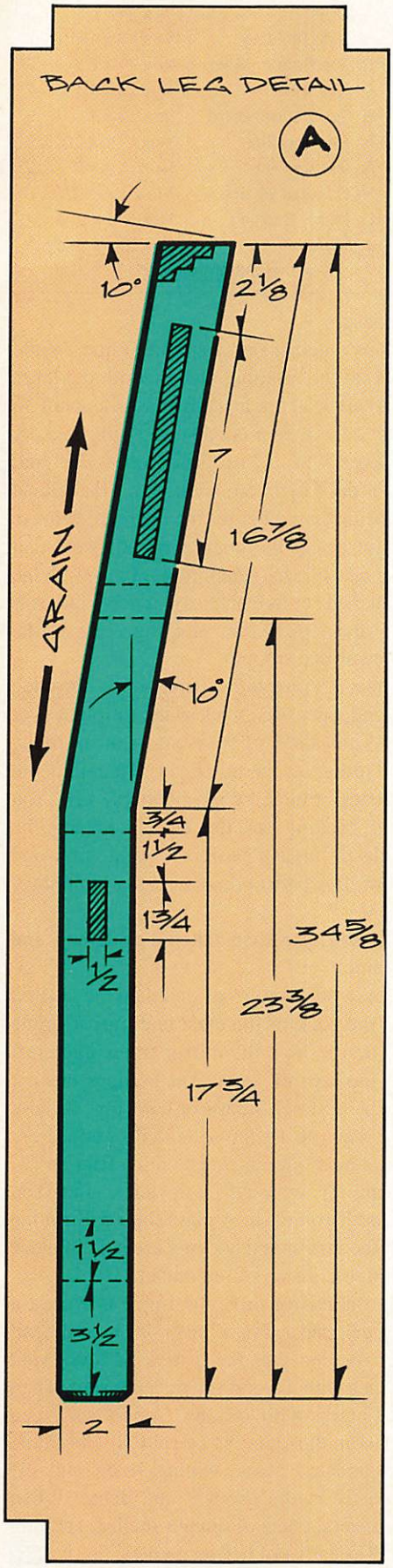

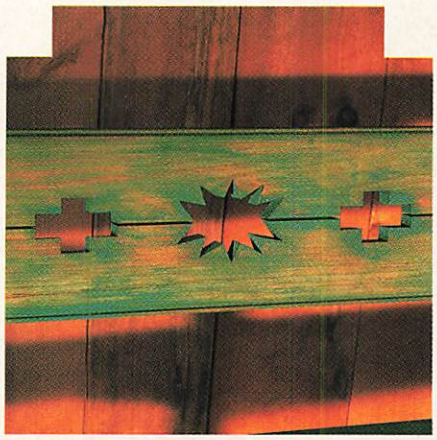

cut them off long, and pare them a bit with the chisel to simulate wear. Leaving the pegs a little proud of the surrounding surface lends the natural look of an antique, where the pegs may have worked out a little over the years. The chamfers on the exposed tenon ends are done by hand with a chisel.

Now make the crossties (I) and cleats (L). The cleats are just blocks, but the crossties have dovetails cut across one-half their width on each end. The dovetails are cut by hand using a dovetail saw. Cut the dovetails first, then use them as a template for marking the dovetail mortises on the seat rails. These mortises are chopped out with a chisel. Stay inside your line, then final pare as needed to get a good fit. The crossties are glued at the dovetails, and the cleats are glued to the inside face of the top end rails.

Cut the seat boards to fit, notching them where they tuck around the legs. Secure the seat with pegs, using the same technique described above. Note that the holes for the end pegs are drilled at an angle into the cleats. After a final sanding, you are now ready for our turquoise finish.

The Finish

Our painted finish was made with Liquitex or Aquatec artist's acrylics. They're available at artist's supply stores.

The first step in the finishing process is an application of Minwax Puritan Pine stain to the bare wood. Next, mix about two parts cerulean blue with one part thalo blue and one part thalo green, perhaps weighing your mixture a little toward the green side. Add white, lightening the turquoise shade to achieve your personal preference. Then thin with water to a cream consistency.

Paint on, and then wipe the turquoise off in sections, working separately on the back, legs, seat, arms, rails and stretcher. Use a damp sponge for the wiping off, wiping away more in the areas that would have received more wear. Clean the sponge regularly in water. Work on one area at a time to avoid having the paint dry before you can wipe it off. Note that in areas of heavy wear you'll be wiping clear down to the wood.

The next step is to highlight with a darker mixture the cracks, crevices, joints, and beads where the finish would have accumulated but not worn away. To make this darker mixture, add some brown and black to the turquoise, and then a little white as needed to lighten. Use a 1-inch brush to apply the mixture around the joints, beads and through-tenons, then wipe off with a rag to feather the transition between the dark mixture and turquoise. Your eye will tell you when you've achieved the right balance.

When dry, apply a coat of McCloskey's Heirloom Eggshell Varnish. Rub out with steel wool when dry, and apply a second coat. When dry, rub lightly once more with steel wool.

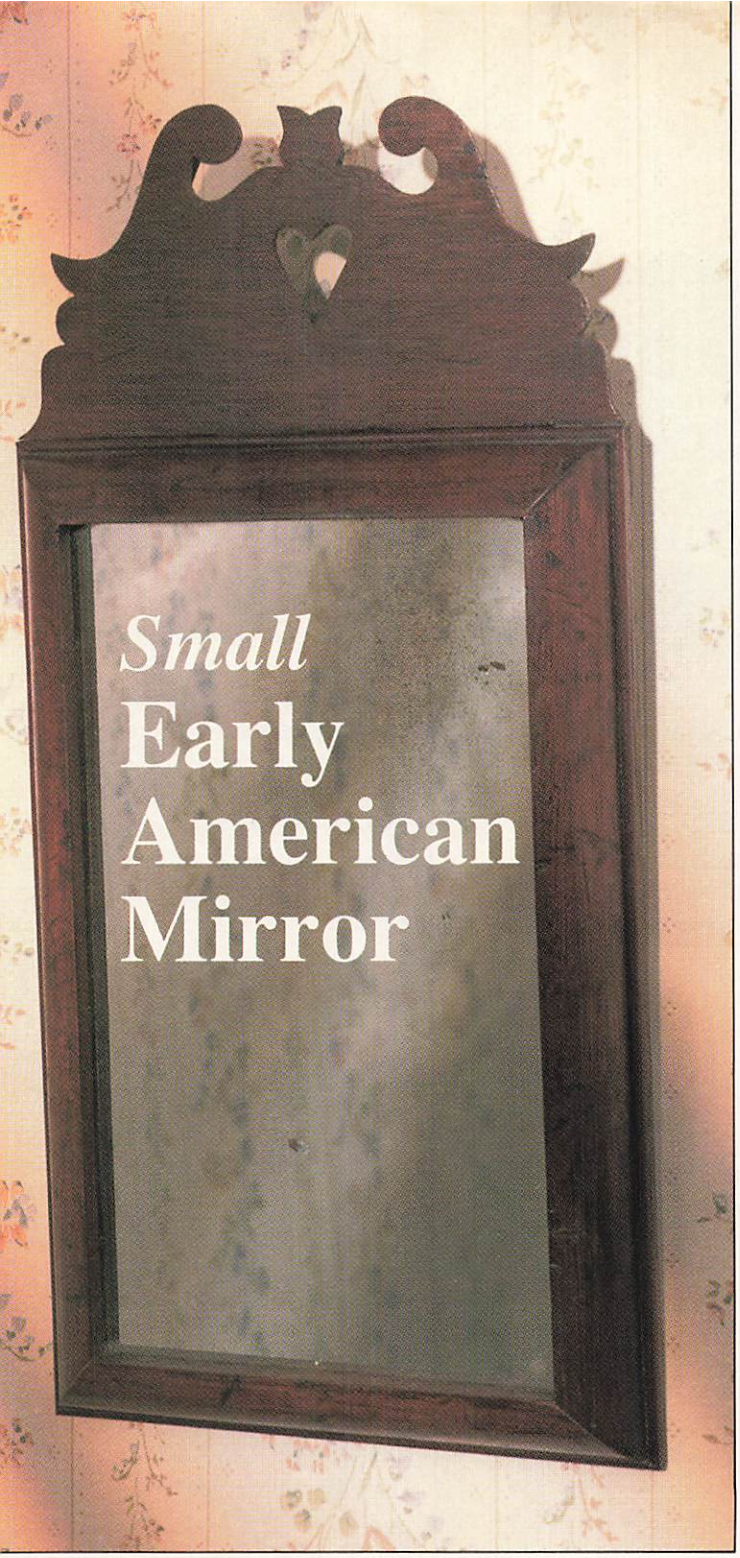

Small Early American Mirror

A child's room is the ideal place for this small mirror and frame, which looks so much like an antique that it could easily fool a dealer. We made ours from old wood salvaged from damaged antiques. The frame was once the molded edge of a drawer front. You can get the same effect by making the piece from "new" wood and distressing it.

An interesting detail is the dovetail wedges that hold the crest onto the frame. They were common on these mirrors and allow you to remove the fragile crest for moving or storage.

The mirror frame is mahogany and pine. The crest (A), quarter-round molding (B and C) and bead (D and E) are mahogany. The backing frame (F and G) and mirror backing (I), are pine. The dovetailed wedges (H) are oak.

Bill of Materials
(all dimensions actual)

Part	Description	Size	No. Req'd.
A	Crest	1/4 x 3 3/8 x 7	1
B	Side Molding	3/4 x 3/4 x 10 1/4	2
C	Top/Bottom Molding	3/4 x 3/4 x 6 3/4	2
D	Side Bead	1/8 x 1/8 x 10 1/2	2
E	Top/Bottom Bead	1/8 x 1/8 x 7	2
F	Backing Stile	1/4 x 11/16 x 10 1/2	2
G	Backing Rail	1/4 x 11/16 x 7	2
H	Dovetail Wedge	3/16 x 1 1/4 x 1 3/4*	2
I	Mirror Backing	1/8 x 5 5/8 x 9 1/8	1
J	Mirror	1/8 x 5 5/8 x 9 1/8	1

* Dimension before taper.

Start by making the backing frame, which is half-lapped together to serve as a firm base for the mitered moldings. Establish the shoulder of the half-laps with the crosscut on the table saw with the blade set 1/8 in. high. Then remove the waste with the workpiece on end and supported by a tenon jig.

Next, glue the half-laps together into a simple frame. While the glue is drying, start on the molding pieces. Both the large quarter-round and the small bead are made from stock about 36 in. long. For the quarter-round, first cut a strip 3/4 in. thick by about 2 in. wide. Measure in 1/4 in. from one edge and establish a groove 3/16 in. deep by 1/2 in. wide with a dado head in the table saw. This forms the rabbet for the mirror. Then use a 3/4 in. radius router bit to cut the quarter round. Note that you'll need a router that takes 1/2 in. shank router bits. With the radius and rabbet established set the table saw fence a tad over 3/4 in. from the blade and rip off the molding. Use a fine sawblade, then sand the surface smooth.

For the small bead, use a 36 in. long strip about 2 in. wide and 1/8 in. thick. Use sandpaper or a block plane to round over a bead along one edge. Then slice off the bead 1/8 in. from the edge. Be careful when cutting off the thin bead. Often thin and narrow stock will kick back or be thrown by the table saw. You should provide a solid backing for the cut by raising the moving table saw blade through a piece of 1/2 in. plywood clamped to the saw top. The plywood serves as a temporary table for the cut.

The two molding sections are then mitered to length and glued to the backing frame.

The crest section is cut with a scroll saw and then the tapered slots are mortised into the back of the crest and mirror frame (Fig. 1). Note that it's best to hold the mirror frame and crest together while cutting the tapered slots. The wedges are cut slightly oversize from 3/16 in. thick scraps of oak (Fig. 2). Use a block plane to adjust them to fit the slots. The wedges are glued into the mirror and held onto the crest with a friction fit.

For the mirror backing (I), we used 1/8 in. thick pine. You can also use thin plywood if you wish. A glass shop will cut the mirror (J) to size. Both the mirror and backing are held in place with cut nails driven into the inside of the rabbet.

But before mounting the mirror, give the frame and crest a good sanding up to 220-grit paper. For a finish, we recommend several coats of orange shellac. For the distressed look, first round over any crisp edges with a wood file or sandpaper. Then apply some well placed marks with various "tools" such as a hammer and a pipe. Darken those marks by rubbing the frame with a dark brown pigmented stain, wiping it on and off quickly so it sticks mostly in the grooves and dents. When you're satisfied, apply several coats of orange shellac, rubbing the finish down with 000 steel wool between coats.

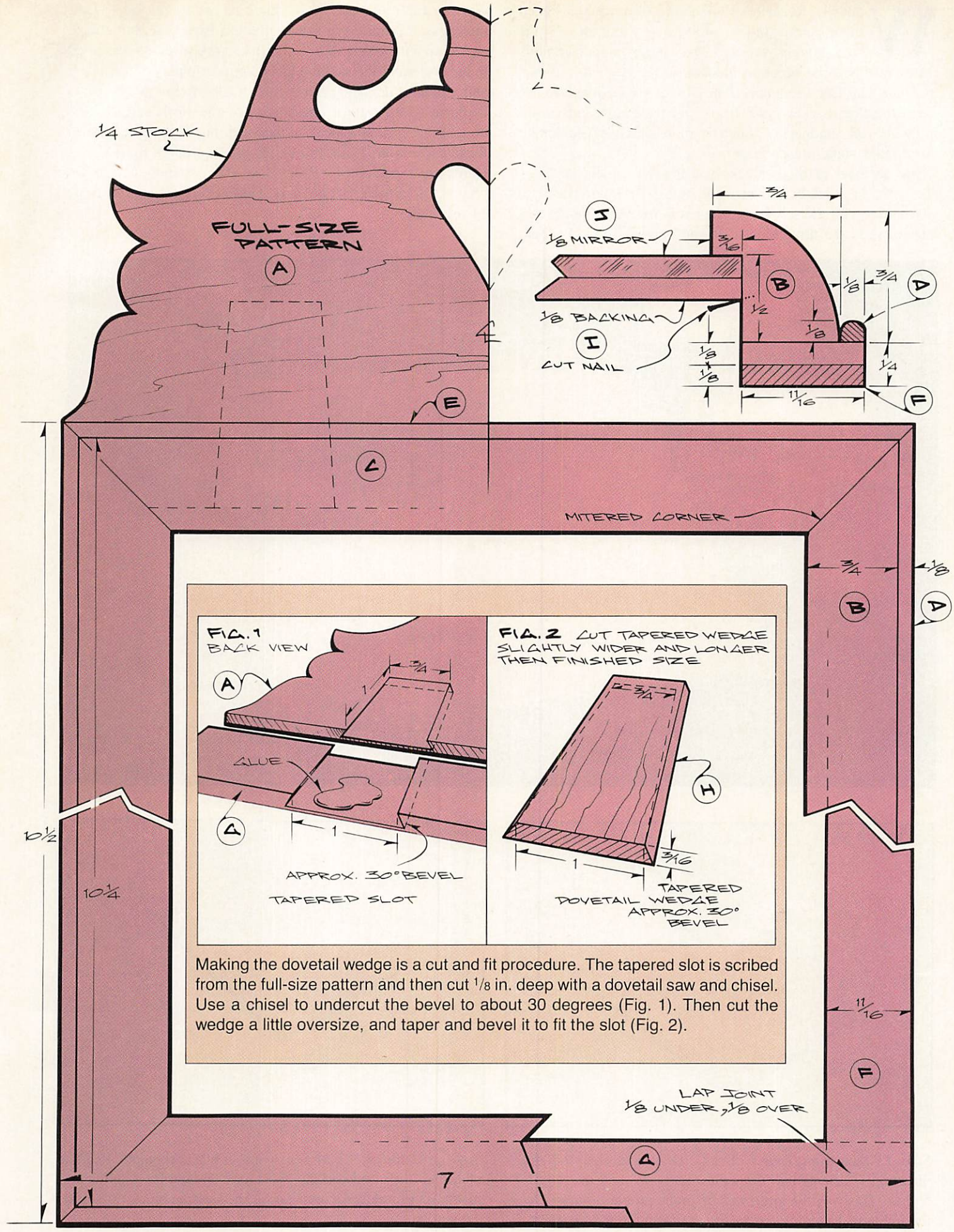

Making the dovetail wedge is a cut and fit procedure. The tapered slot is scribed from the full-size pattern and then cut 1/8 in. deep with a dovetail saw and chisel. Use a chisel to undercut the bevel to about 30 degrees (Fig. 1). Then cut the wedge a little oversize, and taper and bevel it to fit the slot (Fig. 2).

Shop-Built Sanding Blocks

Walter L. Rochette of Glendora, California designed these sanding blocks as a low-cost alternative to the store-bought variety. The step-by-step technique shown yields three separate blocks — one each for coarse, medium, and fine sandpaper. The blocks are designed to use either the cloth-backed paper from 3 in. wide belt sanders or 3 in. wide roll sandpaper, which is more flexible and longer lasting than standard sandpaper.

For each set of three blocks you'll need a piece of stock about 1 1/2 in. thick by 9 1/4 in. wide by 5 1/2 in. long. The extra width allows for the saw kerfs when you make the ripping cuts later to form the three blocks. If you don't have thick stock, you can face-glue two 3/4 in. thick pieces to get the 1 1/2 in. thickness. We made our sanding blocks from pine, but almost any scrap will be fine. The 1/8 in. thick cork sheet that we glued to the bottom of the sanding block helps grip the cloth backing and extends the sandpaper's life. It also helps the block to conform to any slight unevenness of the work surface. We bought our cork at a local lumberyard, but if you can't find it locally, a similar 3/16 in. thick cork can be ordered from Meisel Hardware Specialties, P.O. Box 70, Mound, Minnesota 55364. Order their part no. C31. Cost is $.70 for an 8 1/2 in. by 11 in. sheet.

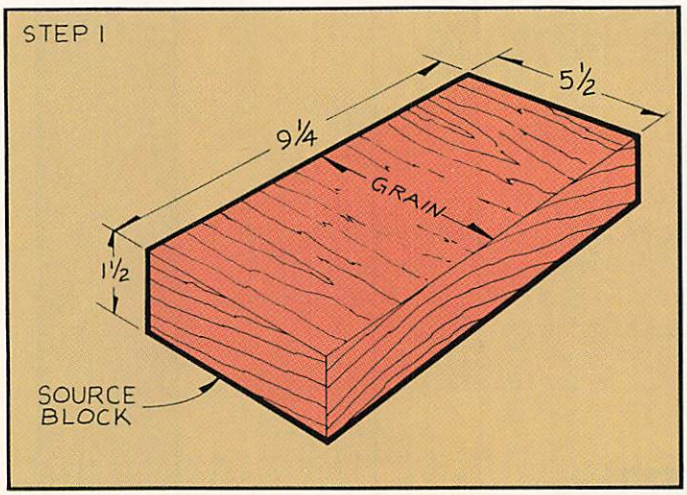

Step 1: Size your source block. Take note that the grain direction is oriented so the width is 9 1/4 in. and the length is 5 1/2 in. This way the grain will be in the proper direction once the individual sanding blocks are cut from the source block.

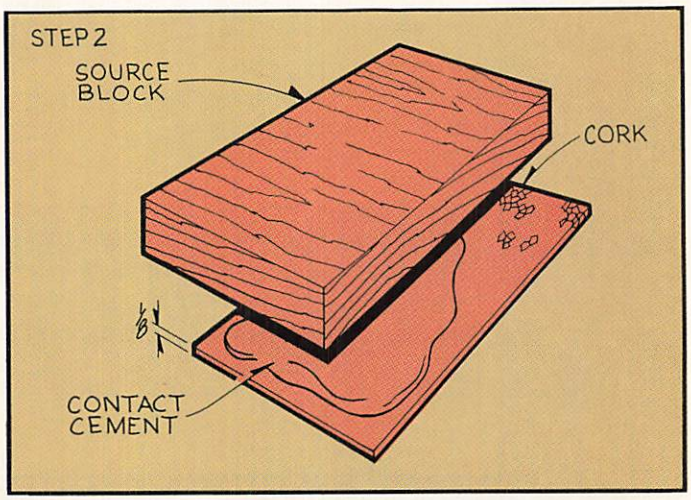

Step 2: Glue the cork on with contact cement. Regular adhesives for woodworking don't have enough flex, and would result in the cork breaking apart as the sanding blocks are used.

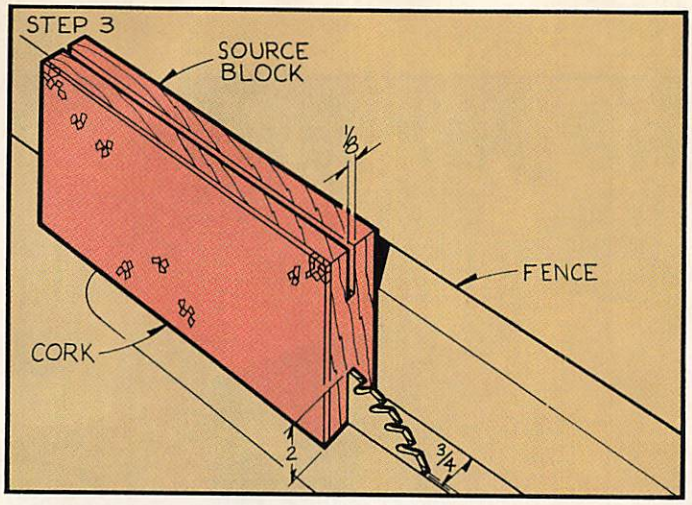

Step 3: Raise the blade on the table saw to a 2 in. height, and set the rip fence 3/4 in. away from the blade. Make a cut into the two end-grain edges, with the cork-faced side of the block facing out for both cuts.

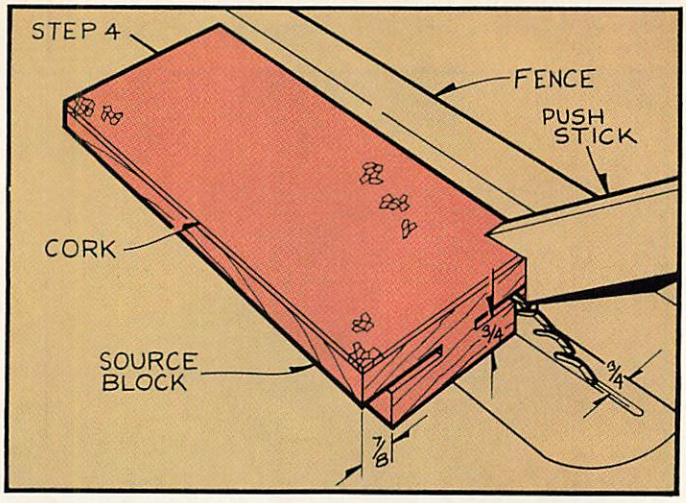

Step 4: Reset the blade to a 3/4 in. height, leave the fence in the same position as Step 3, and make the two crosscuts as shown. Be sure to use a push stick between the blade and fence, as shown, so the cut-off doesn't kick back at you.

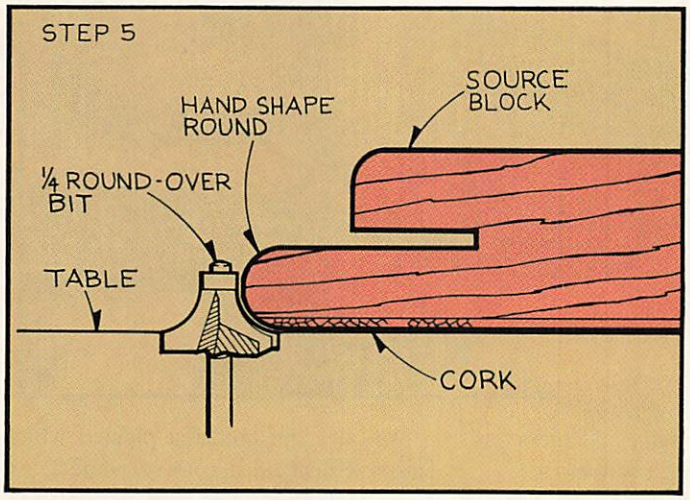

Step 5: Use the router table equipped with a 1/4 in. radius rounding over bit to round the edges as shown. The inside edge can be rounded by hand, using a file and some sandpaper.

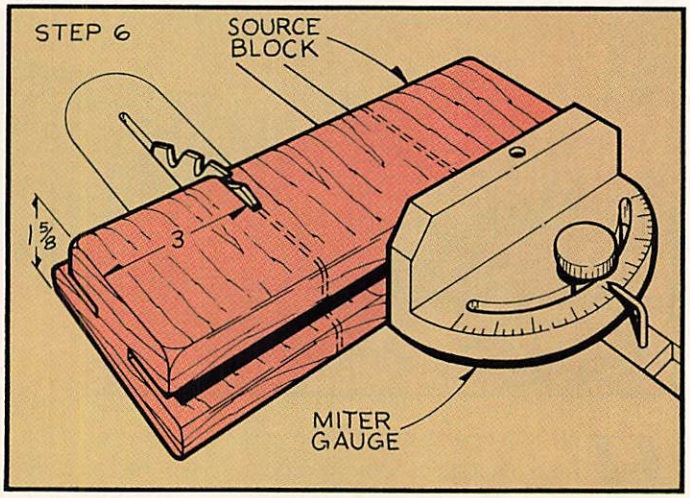

Step 6: Raise the blade to 1 3/4 in. high, and make two ripping cuts to produce the three sanding blocks.

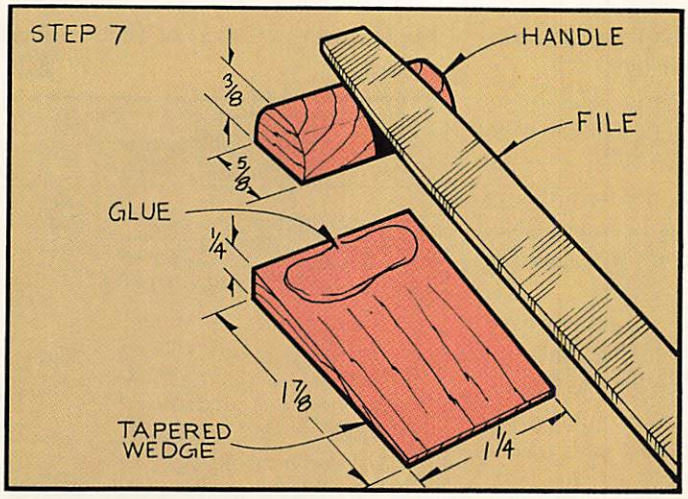

Step 7: Using scrap, make the sandpaper locking keys. These are just tapered wedges with small blocks glued in place to serve as handles. Use a file and sandpaper to round the top edges of the key handles. Make two keys for each sanding block.

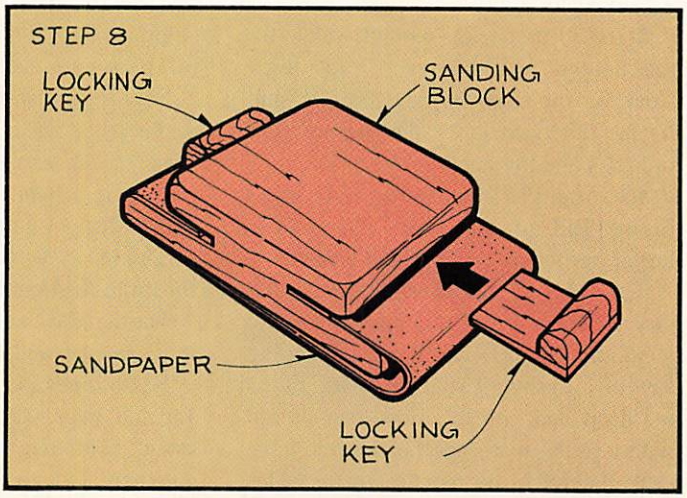

Step 8: Round the top edges and final sand the blocks. Then cut 3 in. wide by 10 in. lengths of sandpaper and mount on the blocks. Adjust the tapers on the locking keys as needed to hold the sandpaper securely. No finish is necessary. WWJ

Cookie Jar Holder

Here's a gift project you can make on a quiet Saturday afternoon. All you need is a few scraps of pine and the cookie jars. The plastic cookie jars are available mail-order if you can't find them locally (see Bill of Materials).

Start by preparing enough stock for the holder. You'll need 3/4 in. thick stock for the sides (A) and lid (D), and 1/2 in. thick stock for the bottom (B), rails (C) and the handles (E).

Next, cut the stock to the sizes listed in the Bill of Materials. Always cut larger parts first to minimize waste.

The sides are cut to shape on a band saw or with a hand-held jigsaw. For the handhold cutouts, you'll need a coping saw or a jigsaw. The 1/2 in. wide by 3/8 in. deep dado on the sides can be cut with a router or a dado head in the table saw. Establish the mortise in the sides with a 1/2 in. diameter drill bit, and square up the mortise with a chisel.

The through tenons on the rails are cut on the table saw. Before cutting the tenons, it's best to try the procedure with a piece of scrap the same thickness as the workpiece to insure a proper fit.

Set the dado head blade to it's widest setting and 1/8 in. high. Pass the workpiece over the dado head using the miter gauge for support. To get the tenons perfectly even, use a stopblock so each tenon is 7/8 in. long. You'll have to make two passes for each shoulder.

Next, establish the 1/2 in. wide by 3/8 in. deep dadoes in the lids with the dado head in the table saw. Then cut the circles on a band saw and form the lip with a straight cutter in the router table, clamping a V-block to the table as shown in the detail.

The handles are shaped on the band saw, and screwed and glued in place.

Next, sand and assemble the holder. Tapered pegs (G) whittled from scrap stock hold the mortises and tenons together, and are driven into the dado joints for the bottom. Drill a 1/8 in. diameter hole and put a dab of glue on the pegs before driving them in. The ends of the through tenons are beveled with a sharp chisel.

We gave the holder a pickled white finish. Brush on a coat of white latex paint and wipe it off with a damp rag before it dries. To give the piece texture, leave more paint on the hard-to-reach areas at the joints. Cover the paint with a coat of shellac or lacquer. The lids are painted with two coats of yellow spray enamel.

Bill of Materials
(all dimensions actual)

Part	Description	Size	No. Req'd.
A	Side	3/4 x 9 x 10	2
B	Bottom	1/2 x 9 x 11 1/2	1
C	Rail	1/2 x 3/4 x 12 1/2*	2
D	Lid	4 5/8 dia. x 3/4 thick	2
E	Handle	1/2 x 1 1/2 x 4 5/8	2
F	Jar	as shown**	2
G	Peg	as shown	10

* Includes length of tenon.
** For a mail-order source for the jars, write to Meisel Hardware Specialties, P.O. Box 70, Mound, MN 55365. Their catalog is free. They sell for $3.79 each not including postage and handling.

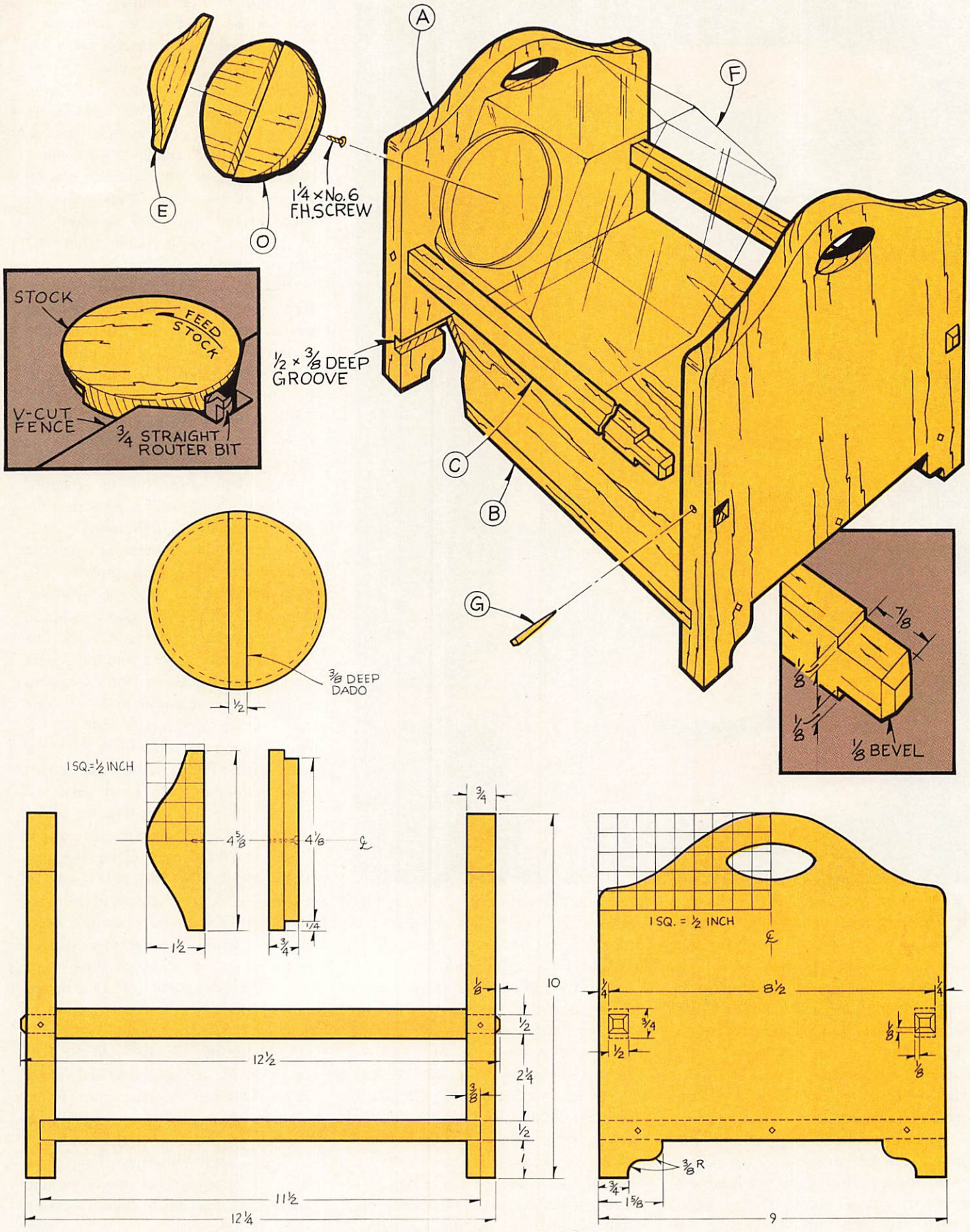
A
F
E
O
1¼ × No. 6
F.H. SCREW
STOCK
FEED
STOCK
V-CUT
FENCE
¾ STRAIGHT
ROUTER BIT
½ × ⅜ DEEP
GROOVE
C
B
G
⅜ DEEP
DADO
½
⅞
⅛
⅛
⅛ BEVEL
1 SQ. = ½ INCH
4⅝
4⅛
℄
1½
¾
¼
¾
10
⅛
½
12½
2¼
⅜
½
11½
12¼
1 SQ. = ½ INCH
℄
8½
¼
¼
¾
½
⅛
⅛
⅜ R
¾
1⅝
9

HOURGLASS

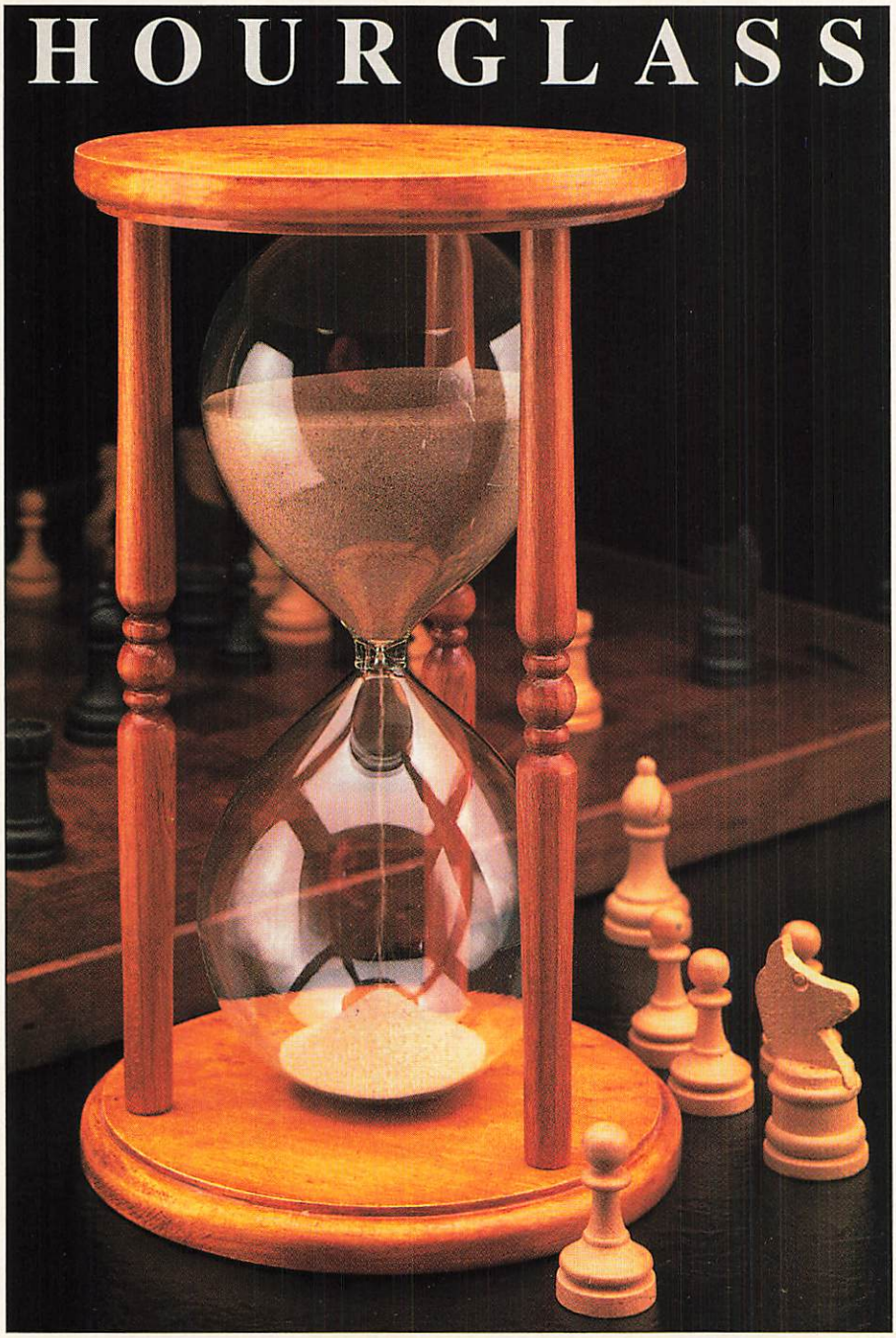

Quartz watches beat it hands-down for accuracy, and honestly now, how many times have you said to yourself "I wish I had an hourglass?" But place this hourglass on your desk or coffee table, and it's a safe bet that guests will inexplicably reach out and turn it over, and watch with curiosity as the sands of time run out. The hourglass is accurate to within about one minute.

The woodworking required for this project can be completed in an afternoon. It's a perfect scrap wood project for that special cutoff you've been saving. We used bird's-eye maple for the top and bottom (A), and cherry for the spindles (B). The hourglass (C) was ordered from Constantine's (see Bill of Materials for ordering information).

Make the top and bottom by cutting 5 1/8 in. diameter circles out of 1/2 in. thick bird's-eye maple. Lay out the circles with a compass, then use the bandsaw or saber saw to make the cut, staying just outside the line. Round to the line using the disk sander.

Next, again using the compass, mark a 4 in. diameter circle on the top and bottom, and divide the circle into 120-degree segments. As shown in the detail, in order to get the 120-degree segments, place the compass point anywhere on the 4 in. diameter, transcribe a 2 in. radius arc, move the compass point over to where the arc intersects the circle, and transcribe a second arc. Repeat this until you've formed six petals. The point of every other petal is one of the three spindle center points. You can also get the center points by making just three arcs. Mark your first arc as we did, then mark an additional arc from each of the points where the first arc intersects the circle.

Drill the 1/4 in. diameter by 5/16 in. deep spindle tenon holes, located at each of the center points. Then drill the 1/2 in. diameter by 5/16 in. deep holes for the hourglass ends. The edge detail in the top and bottom is routed with a ball-bearing guided 3/16 in. radius round-over bit. Set the router bit to establish the 1/16 in. deep step.

We used the lathe to turn the spindles. Cut three turning blanks, each measuring 1/2 in. square by 10 in. long. Use our full-size spindle pattern to make a template to check your progress. To make the template, trace the pattern, then cut it out. Use the cutaway edge as a gauge to check your lathe work. We did all the turning work with the gouge, parting tool and skew. Don't forget to turn the 1/4 in. diameter by 1/4 in. long tenons on the spindle ends. Note that the tenons are not quite as long as the tenon hole depth. This prevents the tenons from bottoming out. Final sand the spindles while they're still on the lathe.

We finished the wooden parts of our hourglass with Minwax Colonial Maple stain, followed by two light coats of orange shellac, and a coat of Minwax Antique Oil finish. Take care not to get any of the finish on the tenons or in the tenon holes. A little masking tape around the tenons will protect them, and short lengths of 1/4 in. diameter dowel in the tenon holes will keep any finish out.

Assemble the spindles into the bottom, then add the hourglass and finally the top. Don't use too much glue in the spindle holes or you'll be spending time cleaning off the excess that squeezes out. Also, apply only light clamp pressure. The hourglass fits snugly into the holder, and too much clamp pressure could crack the glass. WWJ

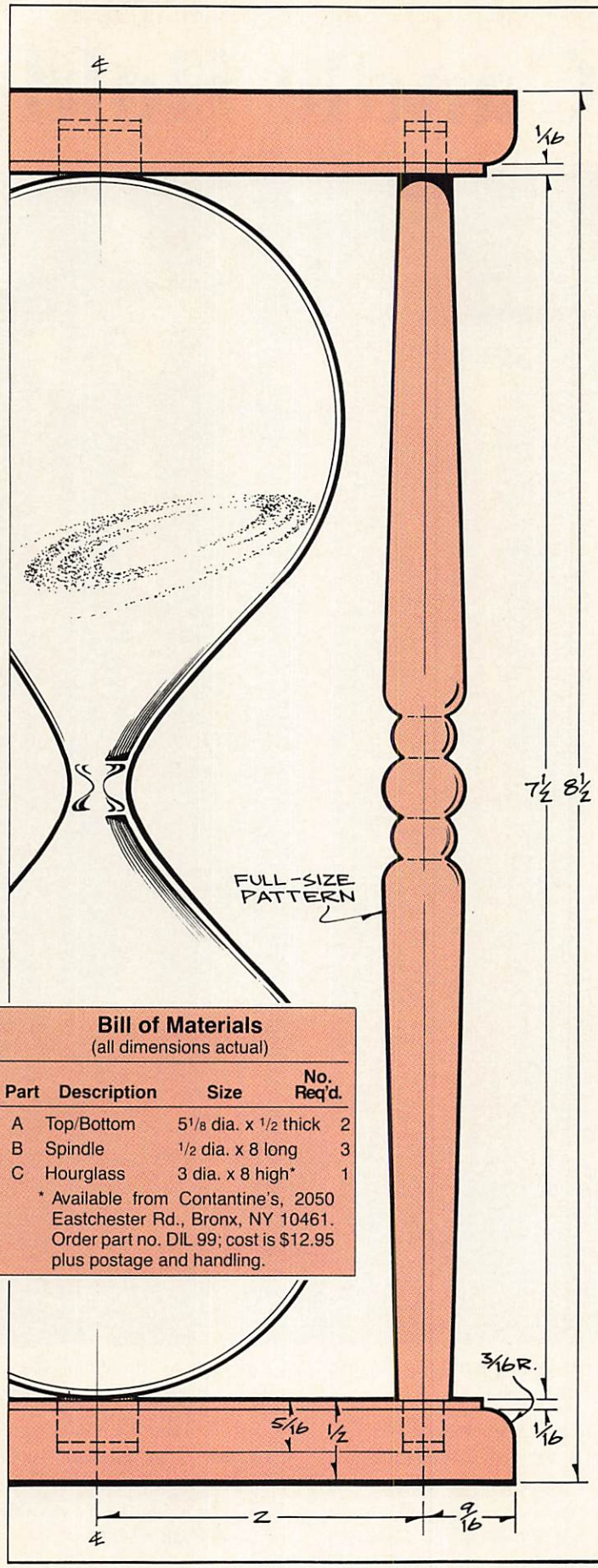

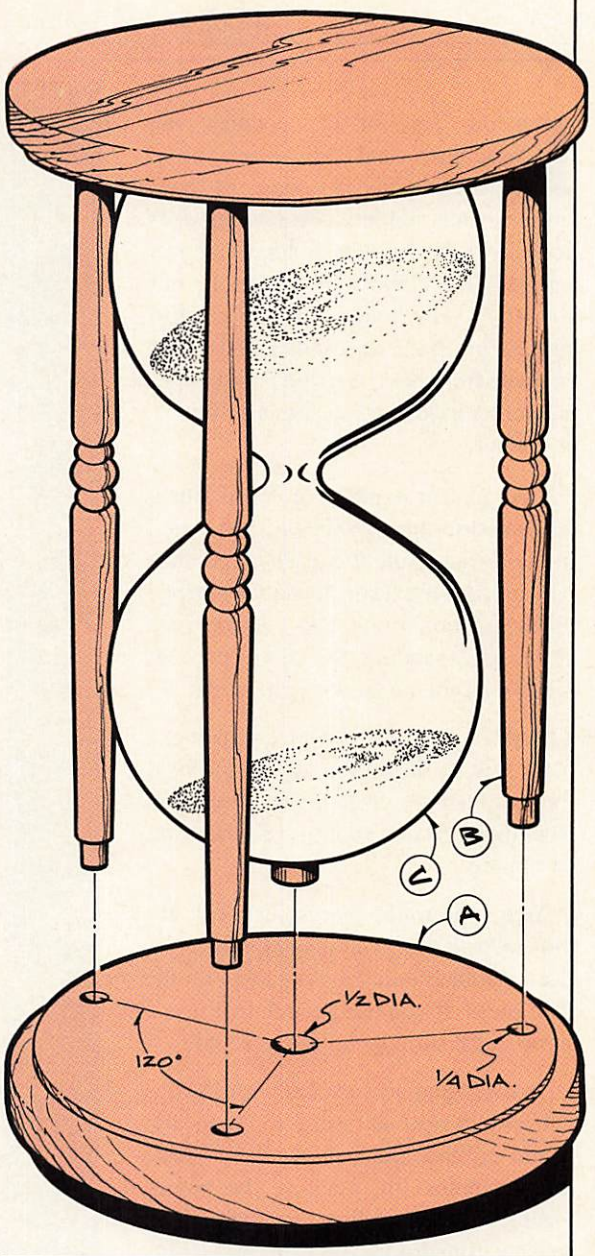

Bill of Materials
(all dimensions actual)

Part	Description	Size	No. Req'd.
A	Top/Bottom	5 1/8 dia. x 1/2 thick	2
B	Spindle	1/2 dia. x 8 long	3
C	Hourglass	3 dia. x 8 high*	1

* Available from Contantine's, 2050 Eastchester Rd., Bronx, NY 10461. Order part no. DIL 99; cost is $12.95 plus postage and handling.

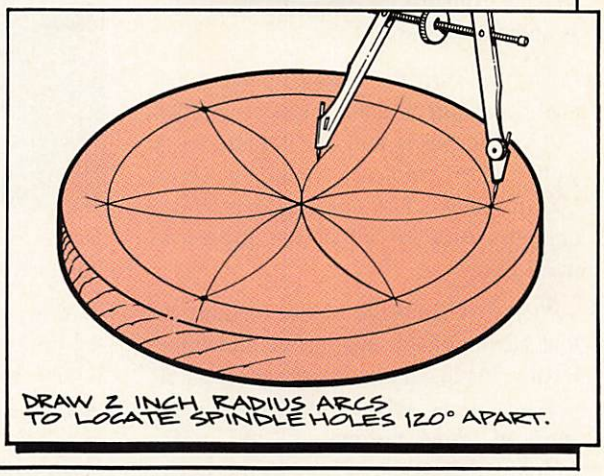

Candle Holder

By Michael Mikutowski

In our part of the country, the Wisconsin and Minnesota area, there are many variations of these simple candle holders. We give instructions for a five-candle holder, but you can vary the number of candles to suit your taste. The holders are designed to take 1/2 in. diameter candles. They can be made from oak, as in the photograph, or another hardwood such as ash, cherry or walnut.

Step 1: Cut a piece of 3/4 in. thick hardwood to the size shown, and pencil in the layout. Note that each piece must be sanded, so extra material is allowed on the sections with saw cuts on both sides. After sanding, the legs of the four L sections should be the same width.

Step 2: Cut out the pieces using a band saw, a scroll saw or a hand-held jigsaw. First crosscut to the line, then meet those cuts by cutting with the grain or ripping.

Step 3: With the pieces cut apart, lay out and drill the 1/2 in. diameter by 5/8 in. deep candle holes. This is easiest on the drill press. If you use a hand drill, use a jig to make sure the holes are square.

Step 4: Sand all surfaces with 180- to 220-grit paper. Be sure to keep the inside corners square. You can check for squareness by stacking the pieces together to see if they are tight. The finished dimensions are 1 in. and 1/2 in. as shown.

Step 5: Turn the holder upside down and insert thin cardboard spacers in each slot (posterboard and file folders work well). The cardboard should be about 1/32 in. thick. The cardboard provides enough space to allow the pieces to pivot freely.

Step 6: Clamp the holder together so that all the pieces are in line and tight. Drill a 3/16 in. diameter hole through all the pieces as shown, stopping 1/8 in. short of going through the top piece, which is now at the bottom of the stack. Use a drill press or a jig to keep the drill bit square to the work.

Step 7: Glue a 4 in. long dowel into the hole in the top piece. When the glue is dry — an hour or so if you used yellow glue — stack the rest of the pieces in place. Then cut off the dowel flush with the bottom. The dowel should fit snugly so all the pieces can pivot freely, but are held on by friction.

Step 8: Trim the holder square on the table saw. Then sand out the saw marks and break the edges with sandpaper. Finish the holder with two or three coats of Watco Danish Oil.

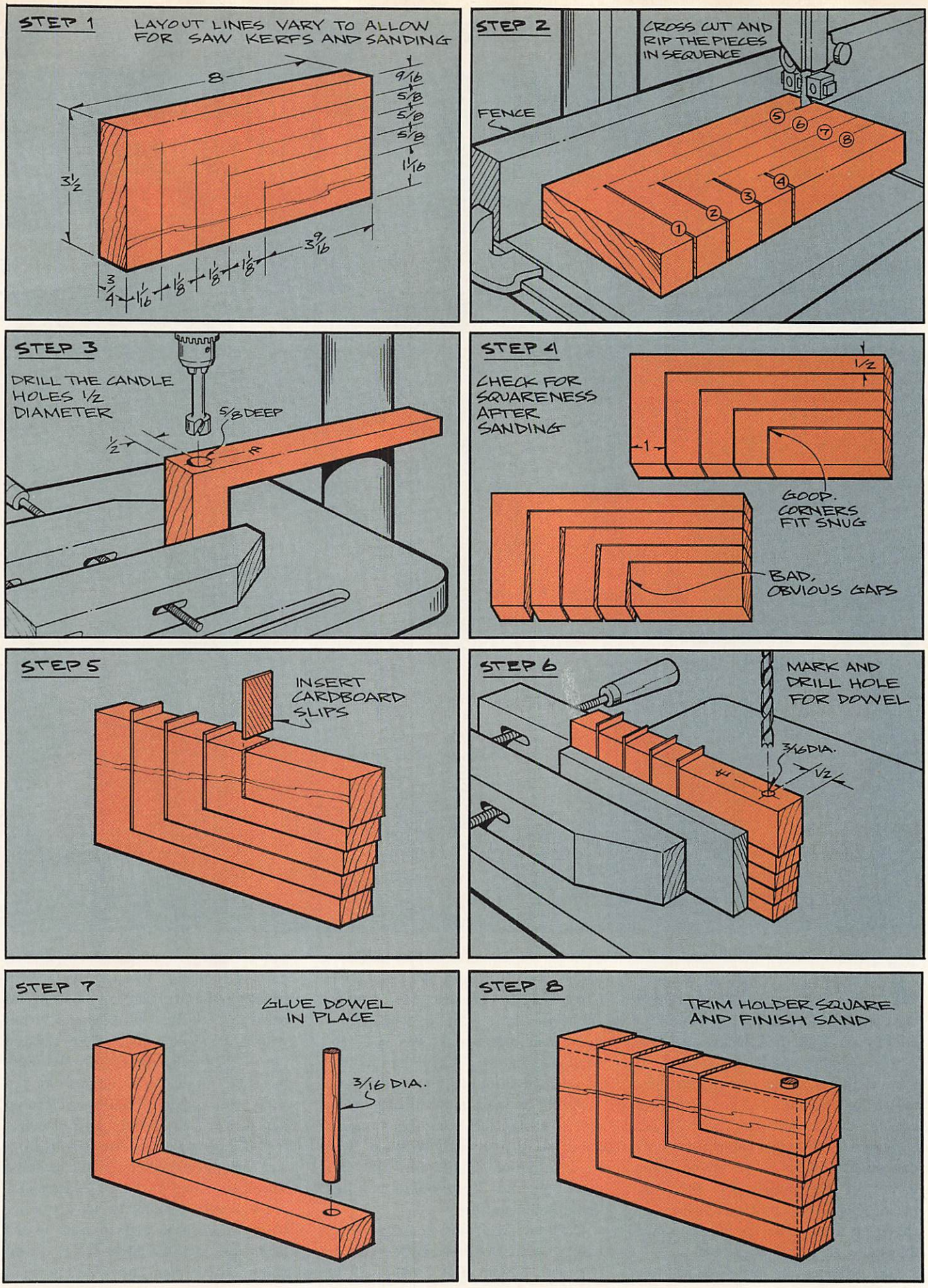
STEP 1
LAYOUT LINES VARY TO ALLOW FOR SAW KERFS AND SANDING
8
3½
9/16
5/8
5/8
5/8
1 1/16
3 9/16
3/4
1/16
1/8
1/8
1/8
STEP 2
CROSS CUT AND RIP THE PIECES IN SEQUENCE
FENCE
1
2
3
4
5
6
7
8
STEP 3
DRILL THE CANDLE HOLES 1/2 DIAMETER
5/8 DEEP
1/2
R
STEP 4
CHECK FOR SQUARENESS AFTER SANDING
1½
1
GOOD. CORNERS FIT SNUG
BAD, OBVIOUS GAPS
STEP 5
INSERT CARDBOARD SLIPS
STEP 6
MARK AND DRILL HOLE FOR DOWEL
3/16 DIA.
1/2
STEP 7
GLUE DOWEL IN PLACE
3/16 DIA.
STEP 8
TRIM HOLDER SQUARE AND FINISH SAND

Toddler Cart

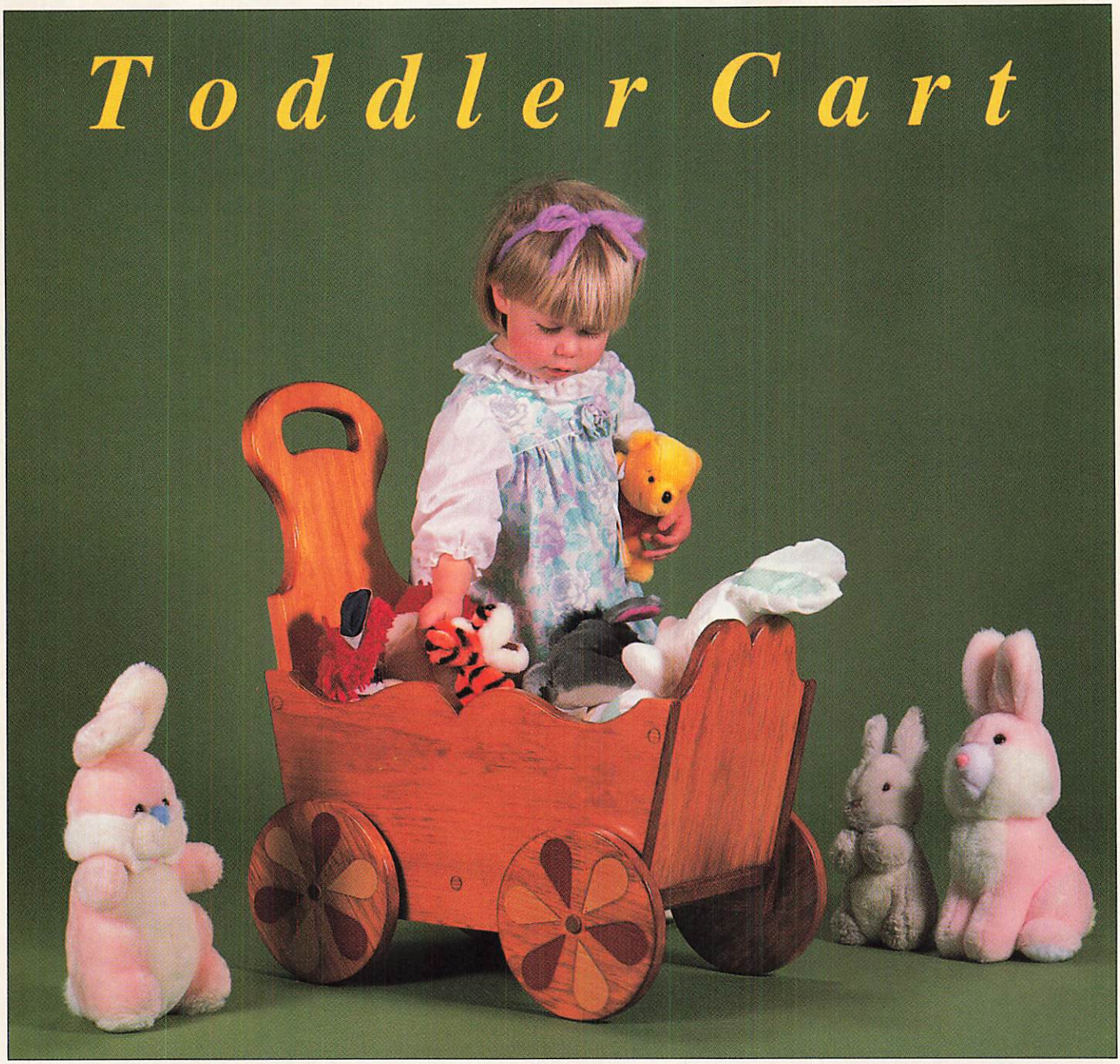

There's a stage most toddlers go through that's halfway between crawling and walking. They'll stand up and "cruise" along one object holding on with their hands and then head to another within arm's reach. If they can't reach another object they revert to crawling. Up to recently a popular choice for this early toddler stage was the wheeled bumper car seats that enabled them to get about using their feet for propulsion. But now pediatricians and child care specialists frown on these. The consensus is that they delay normal development.

Our toddler cart provides just the right assist by giving the toddler a mobile cruise platform. It's a real confidence builder. The cart also provides ample storage for the tot who likes to tote those toys about. We just can't guarantee that they'll load the toys back into the cart after play time is through.

All the wooden parts for the toddler cart — except the axles (E) — can be cut from a 3/4 in. thick by 9 1/4 in. wide by 10 ft. long board. We used clear pine, but a No. 2 pine board with tight knots would be fine.

Crosscut your pine board to rough length for the front (A), back (B), sides (C) and bottom (D). Make all the ripping cuts to establish the widths of parts A through D, then transfer the grid pattern to the stock and cut the front and back profiles. Both profiles can be cut with a band saw, but you'll need a jigsaw for the handle cutout. We tilted the band saw table 12 degrees for the front profile, then used files to clean up the cut. Next, tilt the table saw blade for a 12-degree angle, and crosscut the front and back to final length. While the table saw blade is still set for a 12-degree cut, crosscut the bottom to its 15 7/8 in. length. Switch to a dado head in the table saw. Set the dado for a 3/4 in. width, raise it 1/4 in. above the surface of

Bill of Materials
(all dimensions actual)

Part	Description	Size	No. Req'd.
A	Front	3/4 x 8 1/2 x 9 7/8	1
B	Back	3/4 x 8 1/2 x 18 3/8	1
C	Side	3/4 x 9 x 18 3/4	2
D	Bottom	3/4 x 9 x 15 7/8	1
E	Axle	5/8 dia. x 12 long	2
F	Wheel	7 dia. x 3/4 thick	4
G	Washer	11/16 I.D. x 1 3/4 O.D.	4

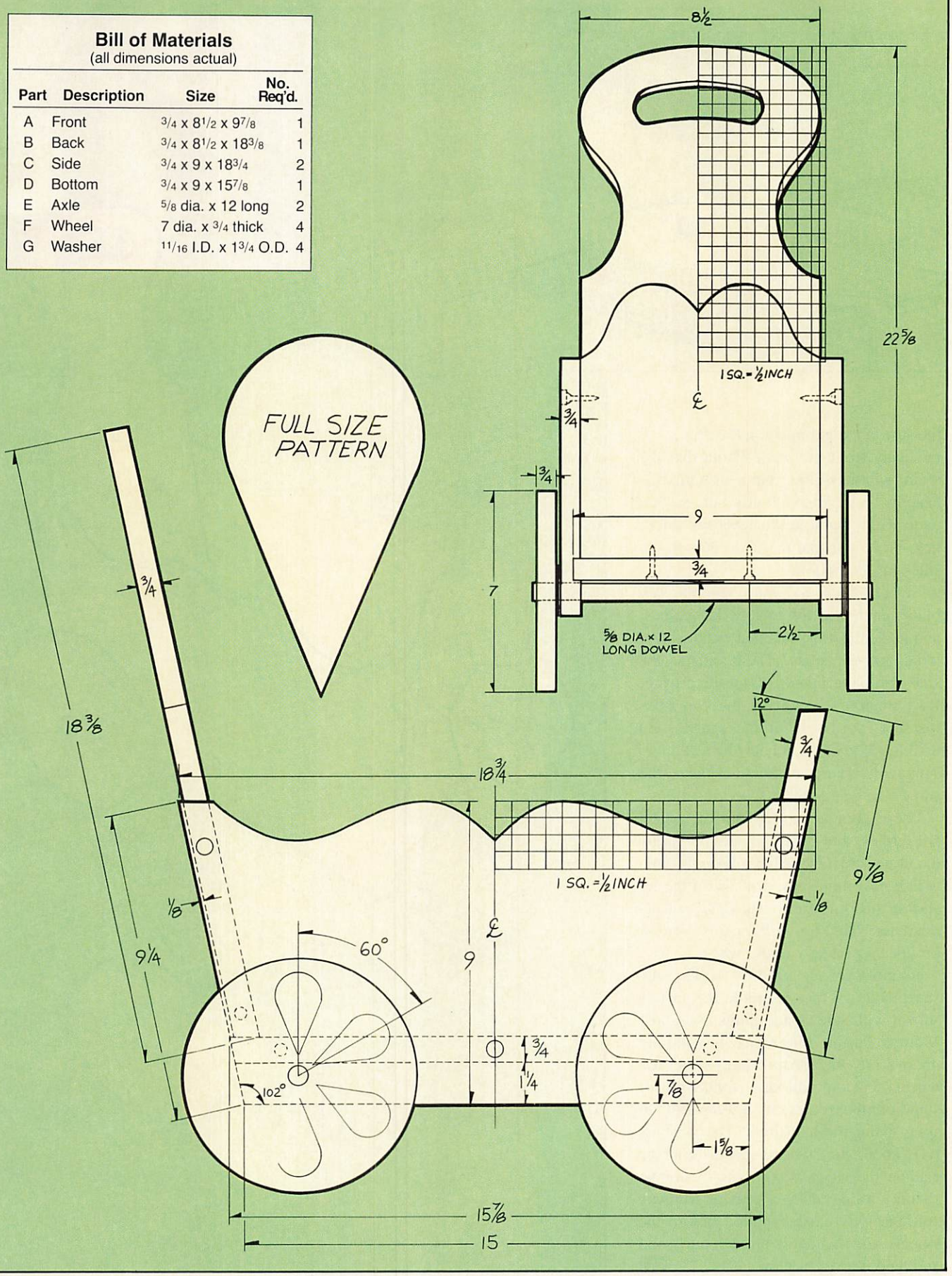

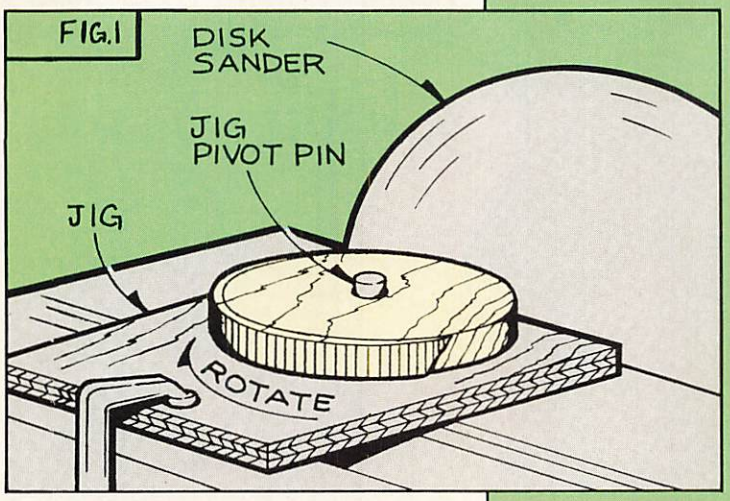

the saw table and position the fence 1 1/4 in. away from the blade. Note that the 3/4 in. width assumes that your bottom is exactly 3/4 in. thick. If it's not, set the dado width equal to whatever the thickness is. Now make the dado cuts in the sides for the bottom.

Switch back to your regular saw blade, angle the miter gauge 12 degrees, and make the crosscuts that establish the length of the sides. Then transfer the side grid pattern and cut out the profile. By temporarily screwing the two sides together, you can cut the profile and drill the axle holes in both sides at once. This will insure accuracy. Locate the screws at the assembly screw locations.

Use a compass to lay out the wheel (F) circles, and the band saw or jigsaw to cut just outside the line. Then drill the axle holes, mount the wheels on the jig shown in Fig. 1, and disk sand to final diameter. The jig will enable you to produce a perfectly round wheel.

Round over or sand to soften any sharp edges. Then assemble the cart as shown with screws and plugs and apply Minwax Puritan Pine stain. To paint the decorative teardrop shape on the wheels, cut our full-size pattern out of some cardboard, use as a template and spray paint the teardrops. The washers (G) keep the wheels from chafing against the sides. Two coats of orange shellac, followed by a coat of Minwax Antique Oil Finish (applied before the wheels are mounted) protect the wood and lend it a warm glow.

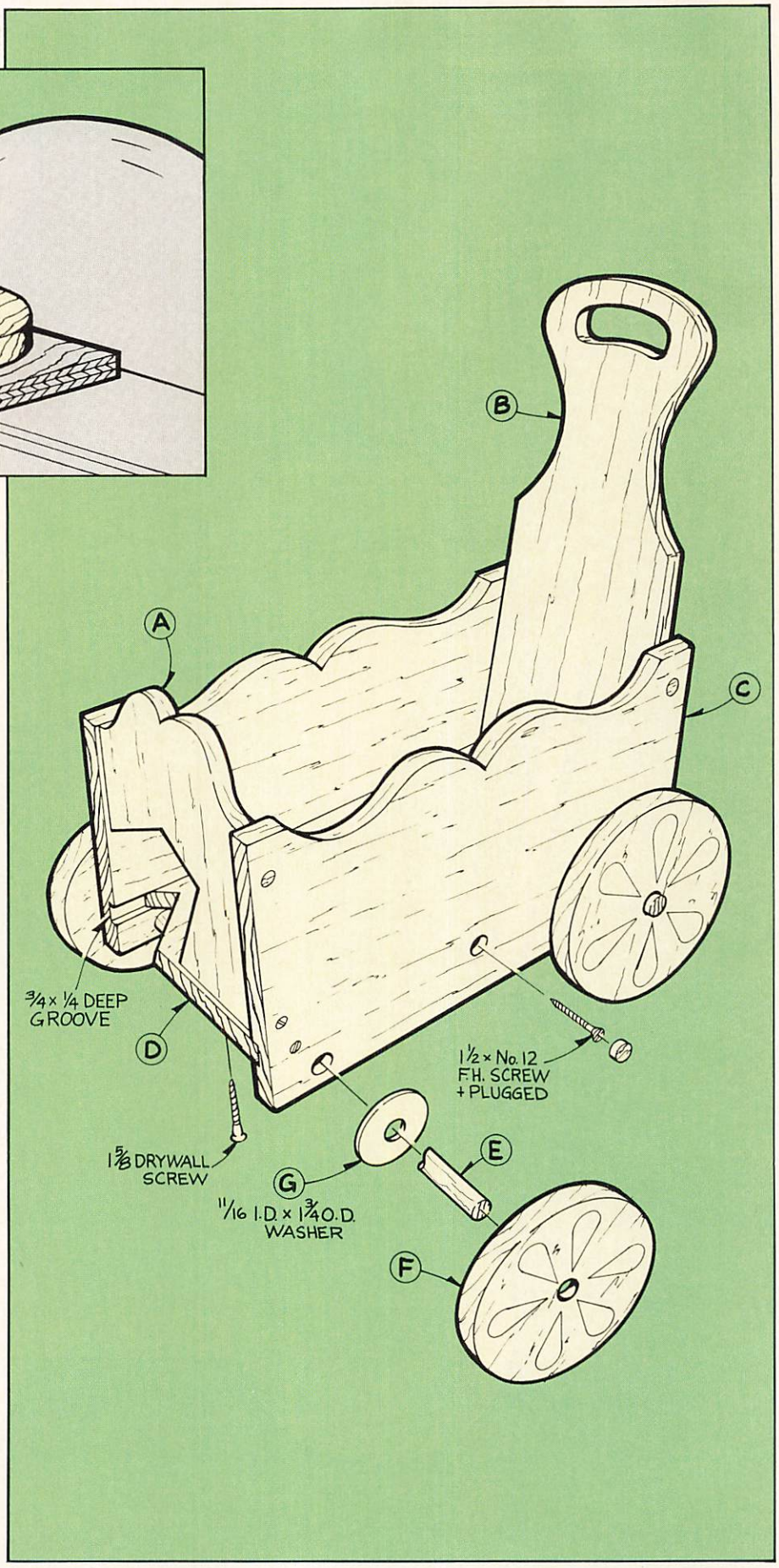

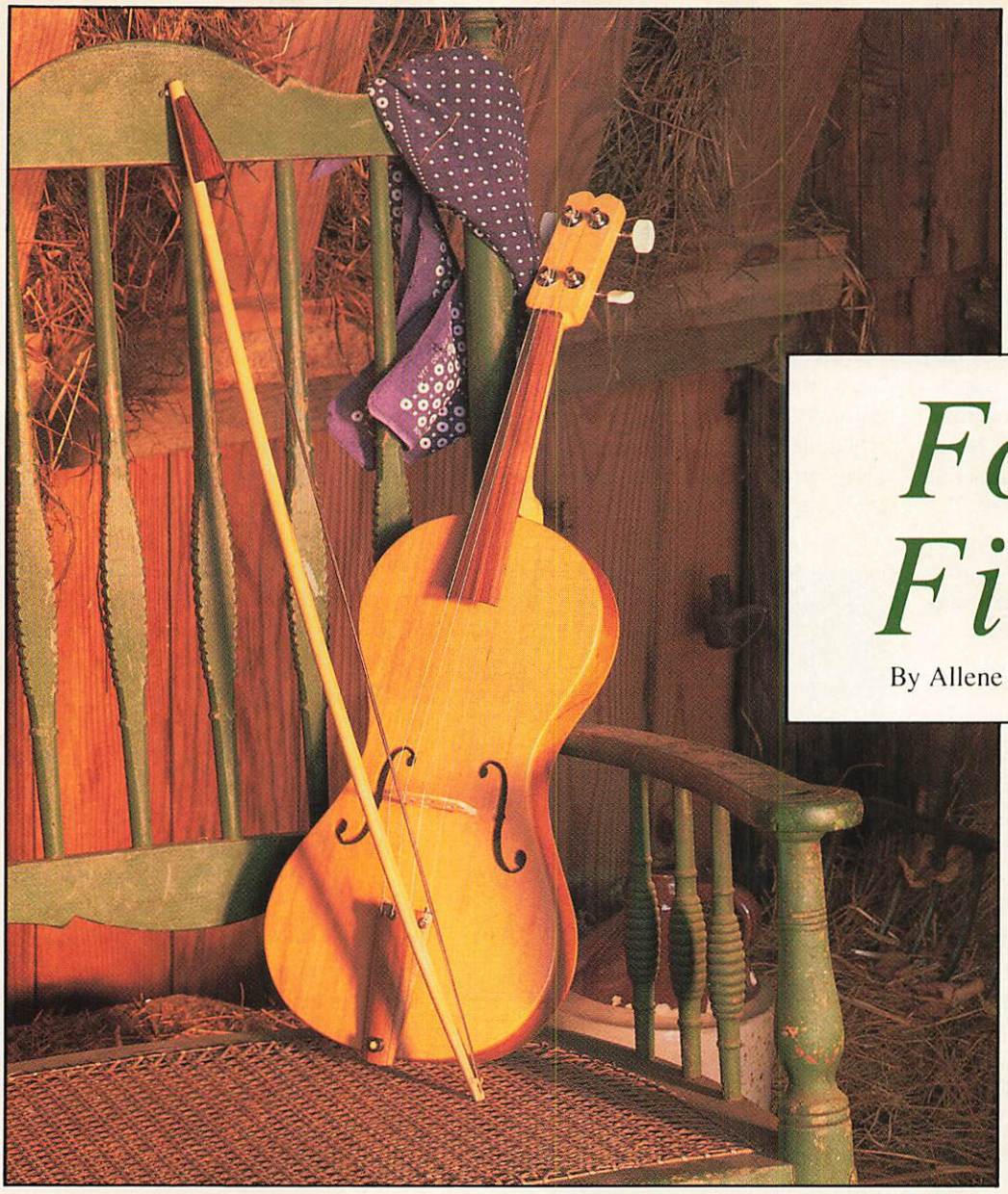

Folk Fiddle

By Allene and Harold Westover

While making a musical instrument may seem frightening at first, remember that it is just woodworking, and that following step-by-step instructions makes it achievable.

The Folk Fiddle is a bowed instrument, like a violin, with four strings tuned in intervals of a fifth, held on the arm or under the chin. The sound is clear and ringing, but not coarse or loud.

A Little History

The story that Nero fiddled while Rome burned is certainly not true, because the fiddle bow wasn't invented until the Arabs made it in the ninth century A.D. No bow, no fiddle. The earliest fiddles were guitars, lutes and lyres played by a bow — a stick bent to stretch horsehair rubbed with pitch or rosin. Drawing the hair over gut, silk, twine, sinew, or metal strings makes them vibrate, producing a musical tone as long as the bowing continues.

Some form of the fiddle exists all over the world, though in an astounding variety of shapes, sounds and uses. One family of fiddles, called violins, became the most prominent in Italy and Germany in the fifteenth and sixteenth centuries. With many subtle, but important, changes the violin remains the most popular fiddle in the Western world. Our Folk Fiddle is derived from the violin. It has violin strings, is played like a violin, and sounds very much like a violin. The flat soundboard and guitar-like shape are departures from traditional violin design, however.

Materials

For the Folk Fiddle we've tried to keep the woods as simple as possible and still maintain high standards. The list is still lengthy. You'll need quarter-sawn western red cedar for the soundboard and bass bar, cherry for the ribs, maple for the neck and bridge, birch plywood for the back, walnut for the fingerboard and tailpiece, birch dowel for the bow, and pine for the interior blocks. You'll also need tuning machines, violin strings, horsehair and grommets. And when you're ready to play the fiddle, you'll need rosin for the bow and a chin rest for support, and perhaps a book of instruction.

Some of the woods are readily available. The maple, cherry, birch plywood

and walnut are available from good lumberyards that carry hardwoods. But the quartersawn cedar and maple must be purchased from a dealer specializing in woods for musical instruments. The tuning machines, brass grommets and bow hair can also be hard to find. To make things easier, we've listed a supplier for all the parts except bits of pine that nearly every woodworker will have on hand. Folkcraft Instruments has agreed to supply all the needed parts, as well as some accessories that you may want (see Bill of Materials). Note, however, that this is not a kit, just the materials. We strongly recommend the materials package for novice woodworkers. Preparing the thin stock used in the fiddle takes some experience and the proper equipment.

The Sound Box

Start by making the sound box. The sound box as a whole resonates, amplifies, refines and projects the vibrations produced by the strings and transmitted by the bridge. The major components are the ribs (A), which form the sides of the fiddle, the soundboard (B), and the back (C). There are also linings (D) which stiffen the ribs and blocks (F and G) at the top and bottom of the sound box. The ribs, linings and blocks are made as a unit and serve as a foundation for the remaining components. That procedure is detailed in the Special Techniques article "Making Musical Instrument Sides" on page 30. When done you'll have a completed rib assembly.

Also in the sound box are the bass bar (H) and soundpost (I). The bass bar is a strip glued to the underside of the soundboard. The soundpost is a softwood dowel that is pressure fitted between the back and soundboard. Both parts are refinements that help resonate and amplify the sounds.

The soundboard, or belly, is the most important element of the sound box and vibrates in sympathy with the strings. To vibrate efficiently, the soundboard needs to be glued to a rigid structure around its edge, the ribs. The ribs are thin, and bent into a complex curve. Thin linings, which can be almost any wood, are glued inside the ribs to stiffen them.

The 1/16 in. thick cherry ribs are made with an oven-bending process detailed in Special Techniques. The simplified bending technique allows novices to make a set of ribs without steam-bending equipment. The seemingly daunting process is no different from any other woodworking task. It's a series of steps that need to be carried out with care.

Cutting the Back and Soundboard

First, lay the completed rib assembly upon the plywood back blank, and carefully draw the outline on the plywood, leaving 1/8 in. extra all around. Then draw the extra shape for the heel of the neck upon the back. See the full-size neck pattern for the shape of the heel. The back laps onto the heel as shown, helping to bind the parts together. Then cut out the shape of the back, leaving the extra shape for the heel attached.

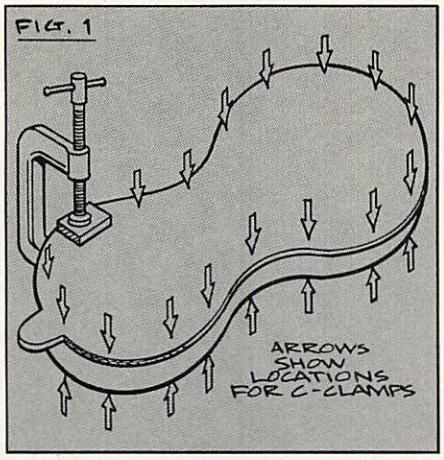

Next, make the soundboard. You'll probably need to edge-glue two pieces; it's hard to find the quartersawn cedar used here in the full 8 in. width. First arrange the two soundboard pieces for a pleasing appearance. The workpieces here are straight-grained quartersawn sections, so you should be able to achieve a nearly invisible joint. When you have a satisfactory orientation, mark the pieces and carefully joint the edges. Then glue the two sections together, taking care to keep the edges of the pieces flush at the seam. Use white or yellow glue. When clamping, you'll need to hold the thin soundboard workpieces flat to prevent them from buckling. After the glue dries, sand both sides with 120- to 180-grit paper. Then cut out the shape the same way you did with the back (by drawing around the rib unit with a pencil and leaving a 1/8 in. allowance all around the perimeter.)

Next, use the full-size pattern to trace the *f* soundhole design on each side of the soundboard and cut it out with a scroll saw, coping saw, or a sharp knife. Sand the inside of the *f* hole with an emory board.

Completing the Sound Box

Before gluing and clamping the ribs to the back, make sure that all lining strips and blocks in the rib assembly are flush to the edge of the ribs, and that the whole unit is smooth and straight. Then use C-Clamps and white or yellow glue to attach the rib assembly to the back (Fig. 1).

While you're waiting for the glue to dry, cut the bass bar (H) to the size given in the Bill of Materials and glue it to the inside of the soundboard, being very careful about the orientation. It must be on the inside of the soundboard as shown in the elevation. Use light pressure with wood-screw clamps.

After the glue is dry, remove the clamps from the soundboard and dress the edge of the back flush with the ribs. Use a wood file — carefully — to remove most of the overhang, and finish up with sandpaper. Then use a plane or chisel to taper the bass bar as shown. The soundbox is now virtually complete, but the soundboard isn't glued in place until after the neck is glued and screwed to the sound box.

Making the Neck

Next, lay out the neck (E) using the full-size patterns. We used maple for the neck, but you can also use pine or another softwood. Hardwood isn't necessary because the fiddle uses tuning machines instead of pegs. Cut the neck to rough shape with a band saw. Then use a rasp, knife and wood files for the final shaping. Also shape the heel to conform to the slight curve of the rib unit. Then drill for the two flathead screws that hold the neck onto the soundbox as shown. The screws extend through the neck block into the heel. (Note that the screws don't take washers.)

Make sure that the neck is in line with the center line of the sound box. To do that, draw the mid-line on the neck, then clamp a flexible straightedge on the neck along that midline, and see that the straightedge projects through the centers

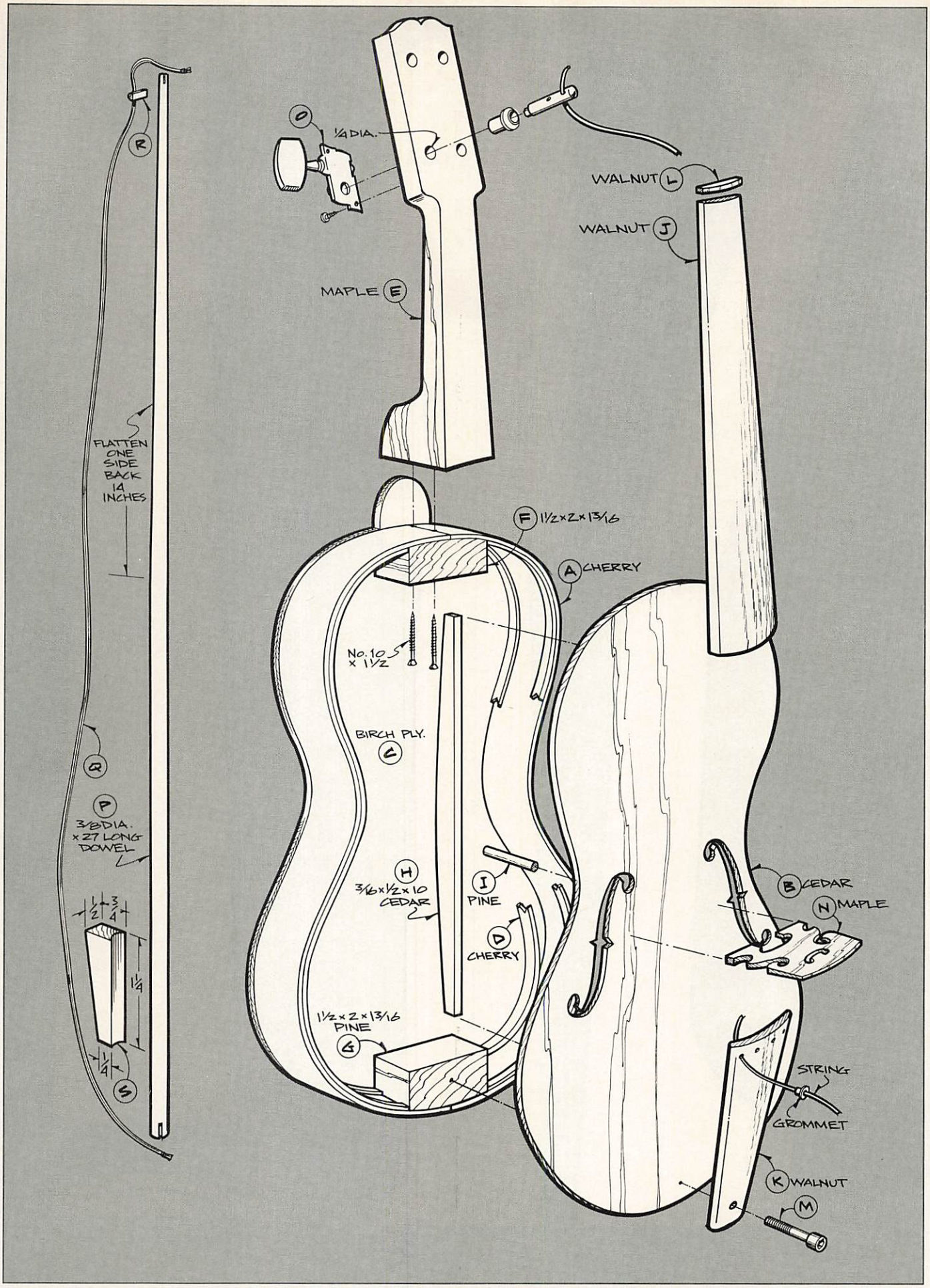
O
¼ DIA.
WALNUT L
WALNUT J
MAPLE E
R
FLATTEN ONE SIDE BACK 14 INCHES
F 1½×2×13/16
A CHERRY
No. 10 × 1½
BIRCH PLY. C
Q
P
3/8 DIA. × 27 LONG DOWEL
H
3/16×½×10 CEDAR
I PINE
D CHERRY
B CEDAR
N MAPLE
1½×2×13/16 PINE
G
STRING
GROMMET
K WALNUT
M
½
¾
1¼
¼
S

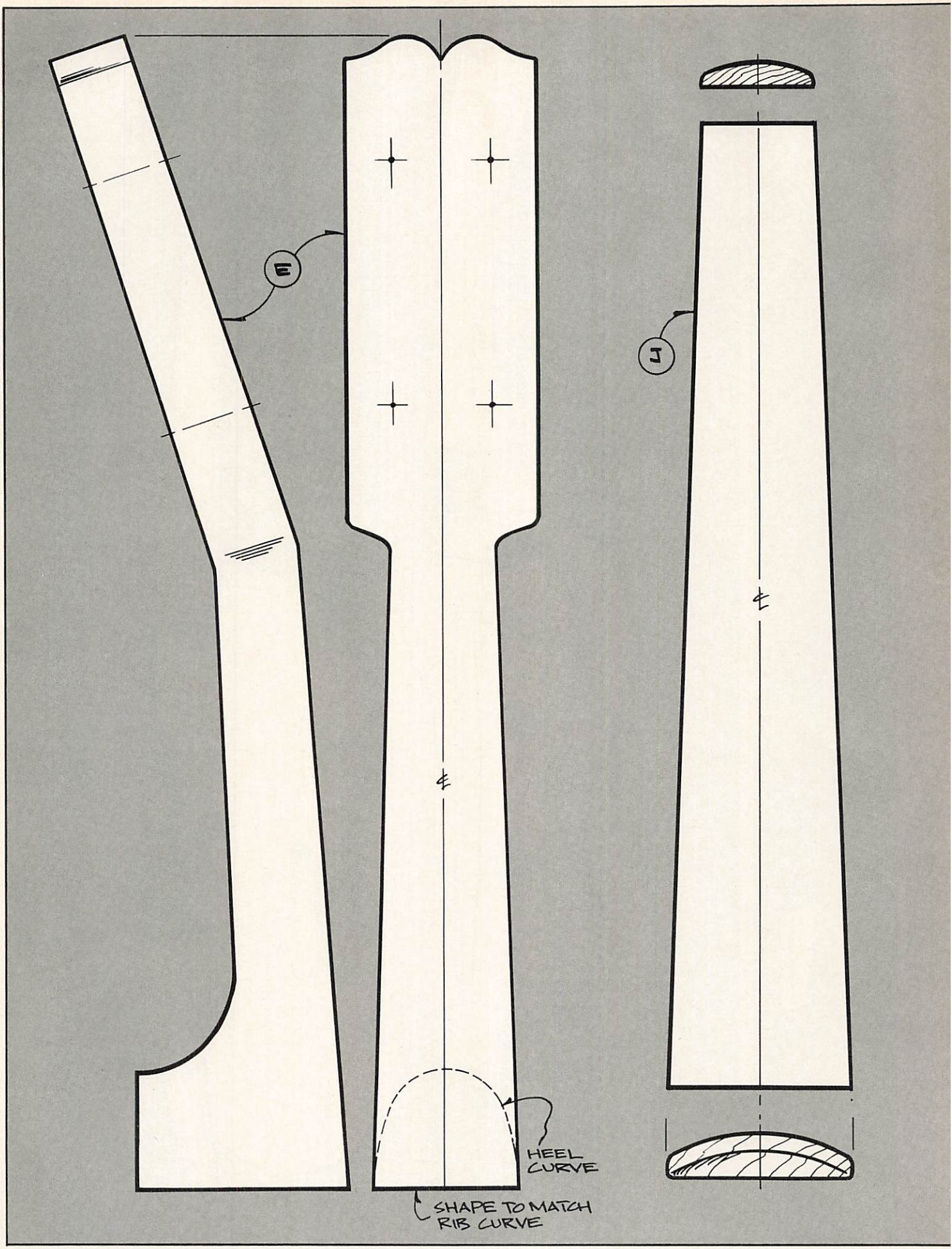
E
F
HEEL CURVE
SHAPE TO MATCH RIB CURVE

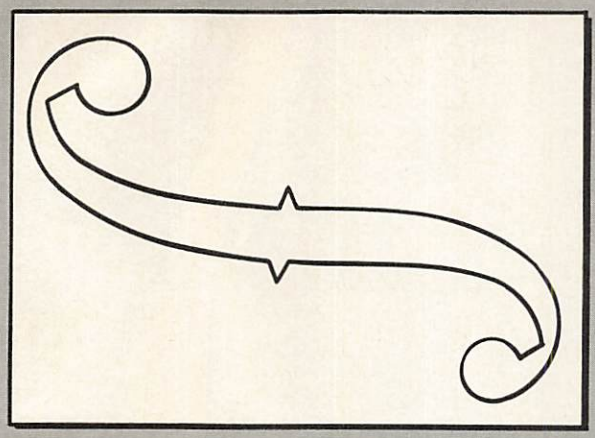

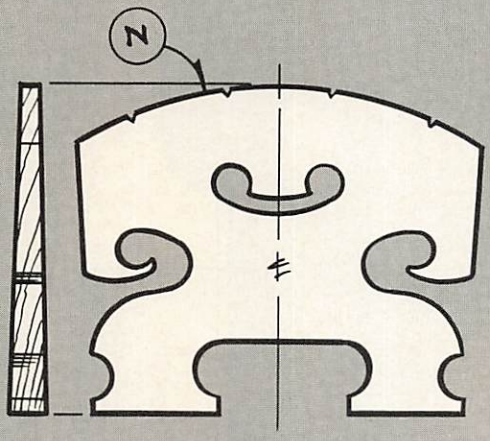

FULL-SIZE PATTERNS

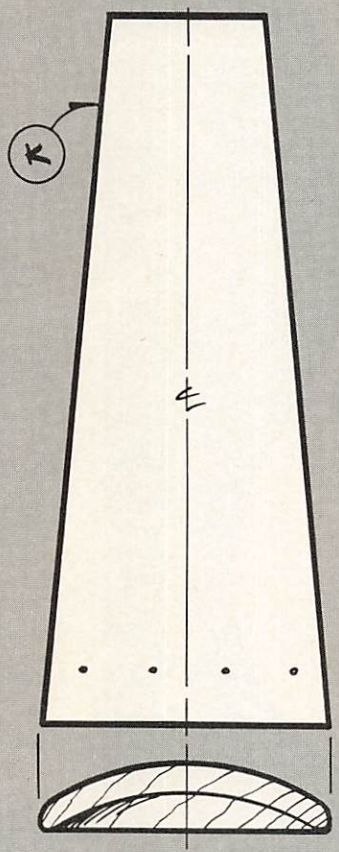

of the neck block (F) and tail block (G). If it doesn't, remove the screws and make correction on the heel of the neck. When you are sure that the angles are right, glue the neck onto the ribs and back, using the screws to apply inward pressure and a clamp to hold the back to the heel. Use white or yellow glue. After the glue dries, locate and drill the 1/4 in. diameter holes for the tuning machines (O).

Attaching the Soundboard

Once the neck joint is dry, remove the clamps and glue the soundboard to the ribs, just as you glued the ribs to the back. Once dry, dress off the overhang of the soundboard with a wood file and sandpaper.

The Fingerboard and Tailpiece

Use the full-size pattern to establish the shape of the fingerboard (J) and tailpiece (K), which are made of walnut. The side view of the fingerboard should be a wedge tapering from 1/4 in. thick on the narrow end to 3/8 in. thick on the wide end. The tailpiece is 3/8 in. thick its entire length. You'll need to glue a working handle on the underside of both the fingerboard and the tailpiece. A piece of 3/8 in. by 3/4 in. scrap should be cut just a little shorter than each. Gluing should be done with 5-minute epoxy. Use a small dab of glue on each end of the work handle so it can be removed easily after shaping.

Use a stationary belt sander or a wood file to shape the fingerboard and tailpiece. Rock the pieces from side to side while holding them against the moving sanding belt, and checking them against the drawing until the right curvature is achieved.

After shaping the tops of the fingerboard and tailpiece, remove the temporary work handles. Use a chisel and mallet. Then, with a rasp, remove some wood from the underside of the wide end of both the fingerboard and tailpiece, so as to create a curve concentric to the top curve of each (Fig. 2).

The nut (L) is also walnut, but with the grain running in the same direction as the bridge. The nut has the same curve as the upper end of the fingerboard, but it sticks up 1/16 in. above the fingerboard.

Attaching the Fingerboard and Tailpiece

The fingerboard is now glued to the neck, leaving 1/8 in. at the upper end of the flat for the nut, which is then glued in place. The four grooves for strings are spaced as shown and established with a file.

Next, drill the 3/32 in. diameter holes in the tailpiece for the strings. The grommets supplied will be a little loose in these holes. Use a dab of epoxy to hold them in. The holes should be equally spaced and about 1/4 in. from the wide end. Also, a 3/8 in. diameter hole for the end pin (M) should be drilled 1/2 in. from the narrow end as shown in the top elevation.

A 5/16 in. hole for the end pin is drilled in the sound box, through the soundboard and into the tail block (G), carefully centered and 3/8 in. from the end of the instrument. Be careful not to drill clear through the back. A piece of masking tape on the drill bit makes a simple depth stop.

A 1 1/4 in. long by 5/16 in. diameter cap screw serves as the end pin. It should fit snugly in the hole, but pull out readily. If it's too tight redrill with the next larger size. If that seems too

Bill of Materials
(all dimensions actual)

Part	Description	Size	No. Req'd.
A	Ribs	1/16 x 13/16 x 20 */**	2
B	Soundboard	3/16 x 8 x 13 7/8*	1
C	Back	3/16 x 8 x 14 3/4*	1
D	Lining	1/16 x 1/4 x as Req'd*	4
E	Neck	1 1/2 x 1 3/4 x 9 1/4	1
F	Neck Block	1 1/2 x 2 x 1 3/16**	1
G	Tail Block	1 1/2 x 2 x 1 3/16**	1
H	Bass Bar	3/16 x 1/2 x 10*	1
I	Soundpost	3/16 dia. x 1 3/16 long	1
J	Fingerboard	3/8 x 1 1/2 x 7 3/4*	1
K	Tailpiece	3/8 x 1 1/2 x 3 3/4*	1
L	Nut	1/8 x 5/16 x 7/8*	1
M	End Pin	5/16 dia. x 1 1/4 long cap screw	1
N	Bridge	3/16 x 1 11/16 x 2 1/8*	1
O	Tuning Machines	as shown*	4
P	Dowel	3/8 dia. x 27 long	1
Q	Horsehair	as req'd*	1
R	Bow Pin	3/16 dia. x 3/8 long	1
S	Frog	1/2 x 3/4 x 2 1/4	1

* Parts available from Folkcraft Instruments, P.O. Box 807, Winsted, CT 06098; (203) 379-9857. The package also includes rosin for the bow, a set of violin strings and grommets for the tailpiece. The package costs $49.95 postage paid. Note that this is not a kit, just the raw materials.

Folkcraft is also offering an additional package that includes an optional tailpiece assembly (tailpiece, end pin, tailpiece adjuster/holder) and a finished bridge. This package costs $11.95 postage paid if ordered with the basic materials package. If ordered separately, add $2 for postage and handling.

** Dimension shown is larger than final size.

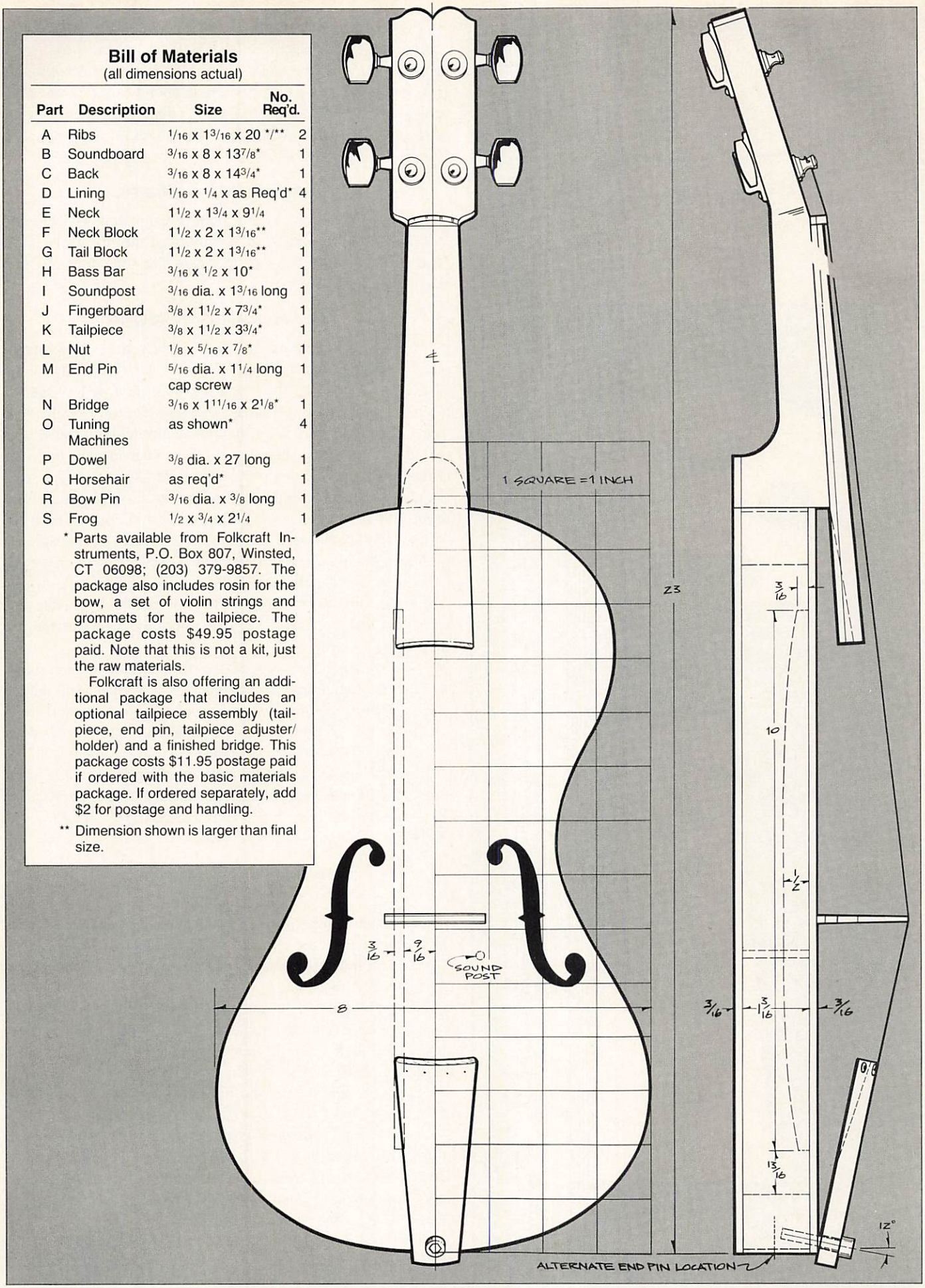

loose, wrap masking tape around the bolt. The head of the bolt keeps the tailpiece in place, securing the strings.

Note that many violins use manufactured tailpieces instead of the custom-made one employed here. Folkcraft Instruments will supply one as part of the optional package listed in the Bill of Materials. If you use the manufactured tailpiece, the attachment procedure is somewhat different than the one given here. It uses a pin that is inserted around the corner through the ribs of the violin, instead of through the soundboard (see note on elevation side view). The tailpiece package also includes the pin and a special wire used to secure the tailpiece to the pin. It also has holes already drilled for the strings.

The Sound Post

The soundpost (I), whittled from pine or cedar, should be 3/16 in. diameter, and as long as necessary to stand between the soundboard and back with nothing but a little tension to keep it in place. Don't use glue. Measure the distance between the soundboard and the back, and add a whisker to determine the length of the sound post.

To set the soundpost, you'll need to cut a 7 in. length of coat-hanger wire. Hammer one end flat and file that flat end to a knife edge. Impale the soundpost upon the knife edge. Then bend the wire so that you may lower the post through the right *f* hole (Fig. 3). Using a thin stiff tool such as a metal rule, shove the post into place as shown.

The Bridge

The bridge (N) is made of quarter-sawn maple. It is 3/16 in. thick where it rests upon the soundboard, and tapers to about 1/16 in. thick at the top. Make sure the grain runs across the bridge so the strings don't split it. Establish the profile from the full-size pattern. Note that the top of the bridge is concentric to the curve of the broad end of the fingerboard. Use a scroll saw or a coping saw to cut the delicate curves. Use a file for the notches. The feet of the bridge stand flat upon the soundboard, and as vertical as possible. (Note that Folkcraft also has finished bridges available as part of the optional package (see Bill of Materials).

The bridge is held in place by the pressure of the strings. Don't use glue.

Making the Bow

Congratulations, you have a fiddle! Any violin bow will play it. But you may want to make your own bow. If so, obtain a fairly straight 3/8 in. birch dowel (P). Plane, file, or sand one end of the dowel so that it tapers to half thickness at the point and to full thickness 14 in. from the half-round end. Then cut the dowel to a 27 in. length.

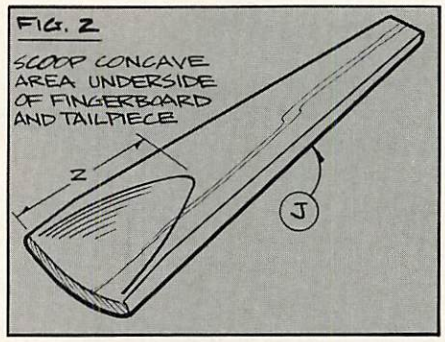

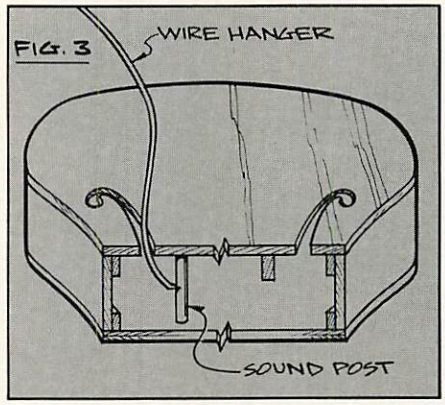

On the flat end, cut a vertical slot 1/16 in. wide and 1/4 in. deep to receive one end of the horsehair (Q). On the other end of the dowel cut another slot 5/8 in. deep, to receive the other end of the hair. On the flat end, glue the bow pin (R), a short length of 3/16 in. diameter dowel with a flat side. Locate the bow pin about 3/8 in. from the end.

To make the frog (S), first cut a piece of hardwood — we used walnut but any hardwood will do — to 1/2 in. thick by 1 1/2 in. wide by 2 1/4 in long. On the end-grain, mark the center of a hole 3/4 in. from one side of the block. On the drill press, bore a 3/8 in. diameter hole. Then rip the frog along the center of the hole and taper the frog as shown.

Horsehair is available from stores that sell musical supplies, and it may be either bleached white or left natural horse color. Color makes no difference. Use only half of the amount of hair supplied. Bind one end of the hair with very fine wire (28-30 gauge steel wire), wrapping it four times around the hank of hair, then twisting it tightly with pliers, and cutting the twisted wire off fairly close. With pliers, flatten the wire knot. Dip the end of the hair into powdered rosin, and melt the powdered rosin with a match, being careful not to ignite the hair. If necessary, repeat the application of the powdered rosin and match melting.

The ball on the end of the hair is now ready for you to slide the hair through the longer slot on the thicker end of the dowel. Comb the hair to remove any tangles, and make sure it is straight. Measure the hair so that it comes just to the other end of the stick, and then bind that other end of the hair with the thin steel wire. Trim the hair 1/8 in. beyond the wire knot. Apply powdered rosin and melt with a match as before.

Now, flexing the stick gently, let the free end of the hair into the slot on the thinned end of the bow stick.

After sanding the frog, gently slip it between the stick and the hair. (Don't glue it in place; it should be free to slide on the bow stock.) Apply powdered rosin, and then rub the bow hair against a cake of rosin. Your bow is ready.

Finishing

After final sanding, finish the instrument with two coats of satin polyurethane varnish, sanding lightly between coats. Follow directions on the can for a smooth, but not too shiny, finish. Finish the frog separately, so it moves freely in the bow.

When the finish is dry, screw the tuning machines (O) in place. They fit snugly in the holes and don't require any glue. Lace the strings through the holes in the tailpiece, then through the holes in the shanks of the tuning machines. Twist the heads of the tuning machines until the strings are under very light tension. Place the bridge in place, and tune the strings, being careful not to knock the bridge over and thus damage the finish on the sound board. The tuning is from left to right (low to high) G, D, A, E.

A good book on playing the fiddle is *Beginning Country Fiddle* by Marilyn Bos (Oak Publications, New York). You can order it from your music store or bookstore.

Plant Stand

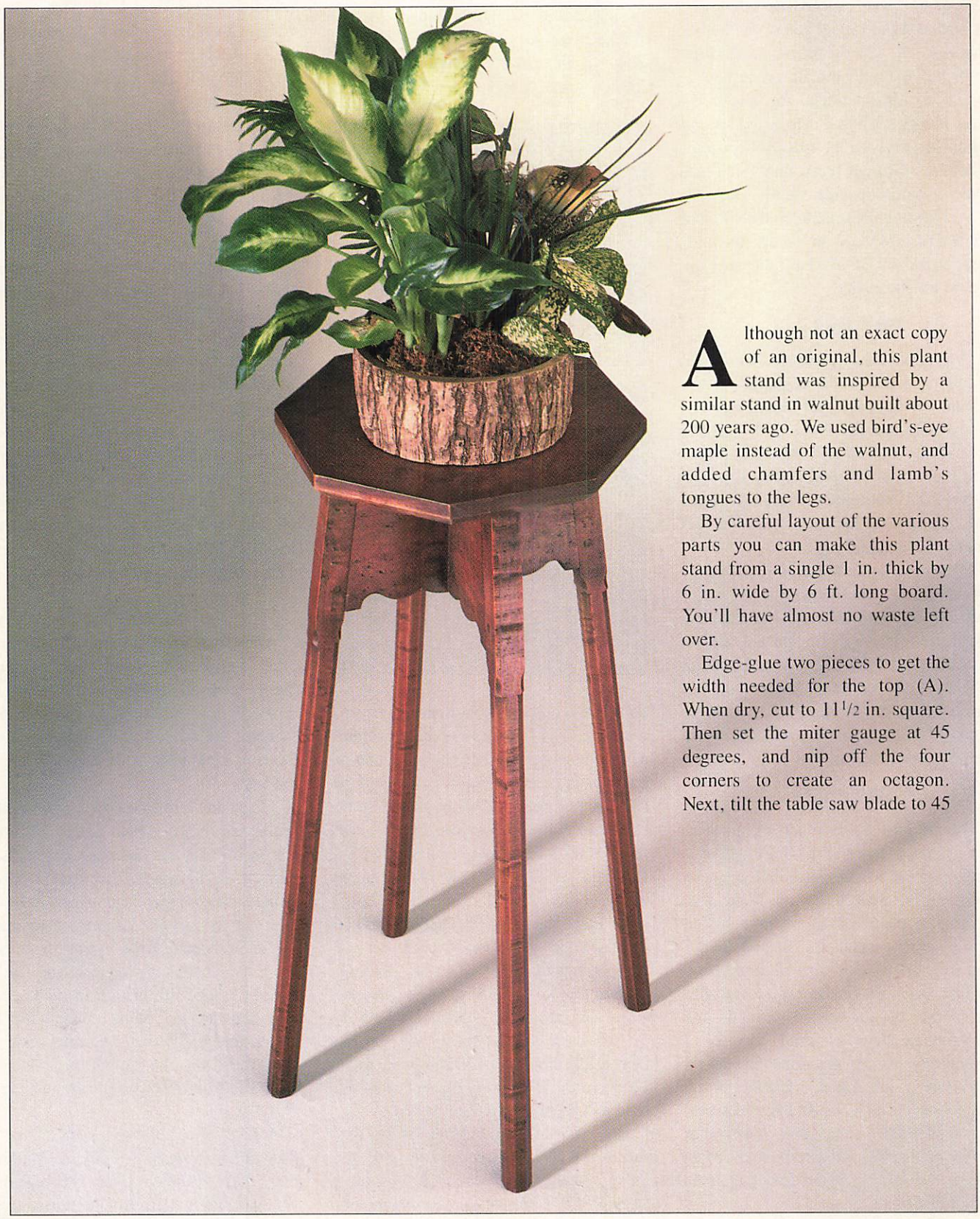

Although not an exact copy of an original, this plant stand was inspired by a similar stand in walnut built about 200 years ago. We used bird's-eye maple instead of the walnut, and added chamfers and lamb's tongues to the legs.

By careful layout of the various parts you can make this plant stand from a single 1 in. thick by 6 in. wide by 6 ft. long board. You'll have almost no waste left over.

Edge-glue two pieces to get the width needed for the top (A). When dry, cut to 11 1/2 in. square. Then set the miter gauge at 45 degrees, and nip off the four corners to create an octagon. Next, tilt the table saw blade to 45

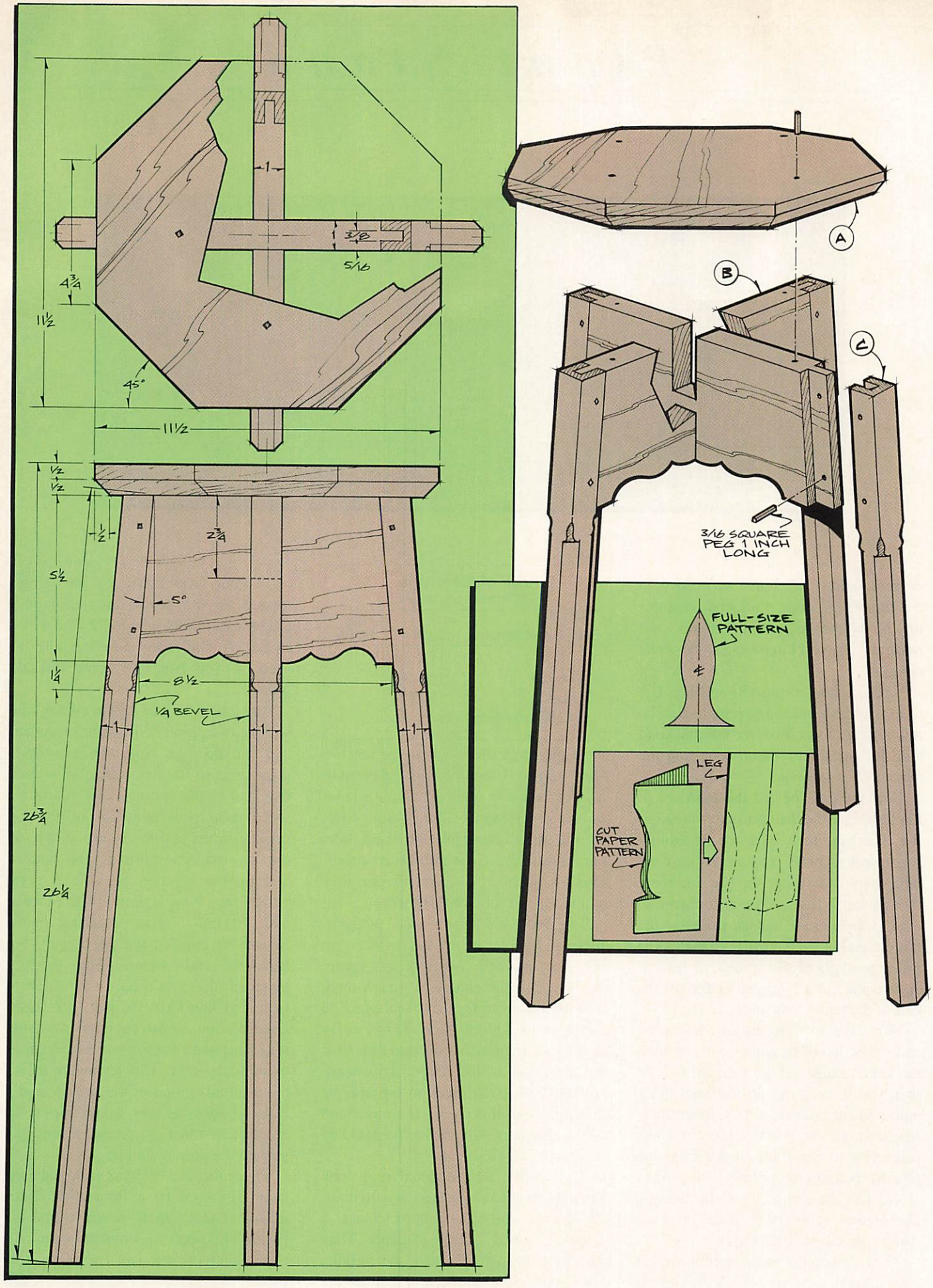
A
B
C
3/16 SQUARE PEG 1 INCH LONG
FULL-SIZE PATTERN
LEG
CUT PAPER PATTERN
11½
4¾
45°
11½
1½
1½
1½
2¾
5½
5°
1¼
8½
¼ BEVEL
1
1
1
26¾
26¼

Plant Stand

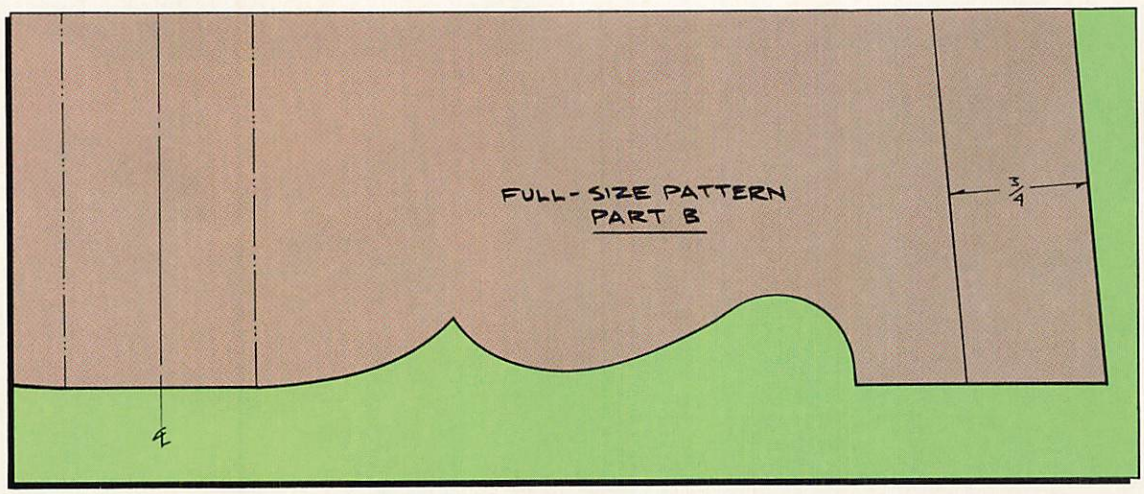

degrees, adjust the fence as needed to cut the 1/2 in. wide 45-degree chamfer on the bottom edges of the top, and make the chamfer cut on each side of the octagon.

Next, cut the aprons (B) and legs (C) to exact width but rough length. Set the miter gauge for a 5-degree cut and final trim the aprons to 10 in. long and the legs to 26 1/4 in. long.

Now lay out and cut the mortises in the legs. Use the drill press to rough out the mortises, then pare the remaining waste with a chisel. You can also use the table saw to rough-in the mortise, though you'll need to use a stopblock to control the mortise length. Undercut the bottom end of each mortise to match the 5-degree angle of the aprons, or leave it square and cut a 5-degree wedge off the end of the tenon instead.

Next, cut the tenons on the apron ends. The tenon shoulders are cut with the miter gauge set to 5 degrees. Note that you'll need to reverse the miter gauge to cut both shoulders. Your blade height should be 5/16 in., but cut a test piece first to check for a good fit in the mortise before committing your project stock. Cut the tenon cheeks by running the aprons across the blade on end, using a tenon jig for support.

The half-notches in the aprons are cut on the band saw. Stay inside the layout lines and use a file to adjust the notches for a snug fit. Use our full-size pattern to lay out the curve (called a Cupid's bow) on the lower edge of the aprons. After cutting the curve with the band saw, pare away the fuzz with a sharp chisel. Don't sand out the chisel marks; they add to the old look of this piece.

Bill of Materials
(all dimensions actual)

Part	Description	Size	No. Req'd.
A	Top	1 x 11 1/2 x 11 1/2	1
B	Apron	1 x 5 1/2 x 10*	2
C	Leg	1 x 1 x 26 1/4	4

* Length includes tenons

The legs are not a true octagon. Instead, four 1/4 in. wide chamfers are cut, one on each corner of the square leg. Lay out the chamfers, rough them in with a drawknife, then final plane to the line with a block plane. Don't worry if some of the bird's eyes pop out, or if the legs look a little rough. This hand-worked look contributes to the antique appearance of this piece. The upper end of the chamfers will need to be pared by hand, using a chisel.

The lamb's tongue detail may look difficult, but here's an easy way to do it. Using our full-size pattern, make a template out of a scrap of paper. Then just fold the pattern down the middle, cut it out, position the template on the leg corner, and mark for the lamb's tongue as shown. To cut the lamb's tongues, carefully pare to the line with a chisel. A half-round file can also be used, if you run into some difficult grain.

Assemble a pair of legs to each apron, slip the two apron half-notches together, and add the top. Note that the top is positioned so its grain direction is on a diagonal to the aprons. This minimizes wood movement problems of the top relative to the aprons. Use glue only on the leg-to-apron mortises and tenons, and on the wooden pegs. The pegs, which are 3/8 in. square at the exposed end, fit into 5/16 in. diameter holes. Round off most of the peg length, but leave the ends square. Size the peg length so that you'll have a little left to trim, but don't cut the pegs off flush. Use a dovetail saw to cut them off a little long, then pare the peg end with a chisel to simulate wear. This technique leaves the peg ends proud of the surface and a little rounded, as they would appear on an antique where wood movement had pushed the pegs out a bit.

The finish is a Minwax Colonial Pine stain, followed by a thinned-out barn red paint that's then mostly wiped off (while still wet) to simulate wear. An application of beeswax completes this piece.

THE WOODWORKER'S MARKETPLACE

WOOD PARTS
TOY, FURNITURE, CRAFT & GAME
Wheels • Spindles • Balls • Knobs • Shaker pegs • And more!
Since 1927! Send $1.00 for Catalog.
BROWN WOOD PRODUCTS CO.
P.O. Box 8246WJ, Northfield, IL 60093 • (312) 446-5200

Full-Size Professional Plan
ADIRONDACK CHAIR

Make this classic American design. Our special version may be folded for storage by using ordinary hardware available at your local store. Be ready for Summer and get your plan now!

CATALOG 200 full-size professional furniture plans — **$3.00**

Plan #700 . . . . . $12.95
(Catalog free with order)

FURNITURE DESIGNS, INC. Dept. JA-30
1827 Elmdale Ave., Glenview, IL 60025 — (708) 657-7526

Sleeveless
DRUM SANDER
Uses regular sandpaper — no pre-made sleeves to buy!

Lifetime Guarantee

USE ON:
Drill press, motor, lathe, combo-tools, radial saw, drills.

Twist of key tightens sandpaper to drum. Rubber backing insures long sandpaper wear.

1" × 3" long	$14.95
2" × 3" long	$16.95
2½" × 3" long	$17.95
3" × 3" long	$18.95
1" × 2½" above	**$29.95**
Set of 4 above	**$59.95**
¾" × 3" long	$15.95
2½" × 4½" long	$22.95
3" × 4½" long	$24.95
2½" × 6" long	$27.95
3" × 6" long	$29.95

Add $2.50 per order for shipping.

AVAILABLE WITH:
*½" bore with ½", ⅜", or ¼" shaft
*½-20 RH thread (except ¾" × 3")
*⅝" bore (except ¾" × 3" and 2" × 3")

MC, Visa, Check or Money order to:
SINGLEY SPECIALTY CO. INC.
P.O. BOX 5087J, GREENSBORO, N.C. 27403
CALL: (919) 852-8581

WOODWORKERS

Jennings Products has **NEW IDEAS** to make your projects more professional looking without having to increase your skill level. Our system is also an excellent money maker for either full or part time shops. We not only have project plans, but plans for jigs and fixtures to mass produce - **PLUS** FREE 4-color brochures to help product sales. **PLUS** an in-depth supply of silkscreens especially designed for our wood products. Turn a $.30 piece of wood into a $10.00 plaque with three silkscreens. It only takes a few minutes to make the jig *(from scrap plywood)* and learn how to screen. Our products are inexpensive and easy to use. Slant-top breadboxes and wall clocks, grist mills and blacksmith shops are only a few samples of our products and screens. Send for the whole story. IT'S FREE.

JENNINGS PRODUCTS
P.O. Box 1121, Dept. WJ-2
Hendersonville, TN 37077-1121

Customers Are Waiting...
RESTORE FURNITURE!
$200-$1000 a day secure cash business!
Unlimited market! Set-Up Costs **Only** $2,999-$9,999!
Complete training; no prior experience.
Turn-key business perfect for men, women, families. Part-time; full-time.
Make Molds*Veneer*Resilver Strip*Repair*Refinish
Write for Video Brochure.
Send ad & $2 for catalog to:
MINUTEMAN, INC.
Box 8, D-6, Waterloo, WI 53594

THE ONLY "ORIGINAL" LATHE TOP WOOD TURNING DUPLICATORS SOLD WORLD WIDE. MAKES TURNING FASTE SAFE AND EASY. FOR USE BY CRAFTSMEN OR HOBBYISTS ALIKE WITH PROFESSIONAL RESULTS.

EST. 1948
TURN-O-CARVE TOOL
"Original Wood Turning Duplicators"

FREE Literature

TURN-O-CARVE TOOL CO., P.O. Box 8315-WJ
Tampa, Florida 33674

WOOD PARTS
QUALITY - PRICE - SERVICE

1 3/4" Mini Shaker Peg	6.00/100
3 1/2" Reg. Shaker Peg	15.00/100
Reg. Candle Cup	16.00/100
1" Wheel	4.00/100
1/4" Axel Pegs	3.50/100
1 5/8" Sawtooth Hanger	3.00/100
1 1/2" Birch Spindle	8.25/100
1 1/2" Oak Spindle	11.50/100

Orders under $25.00 add $2.50 shipping.
Over $25.00 shipped FREE. Serving Continental U.S.A. Only.

American Woodcrafters Supply
Dept. 1-A
R.R. 2, Box 147
Riceville, IA 50466
515-985-4032
24 Page Catalog 75c or FREE with Order

Imported European Hardware

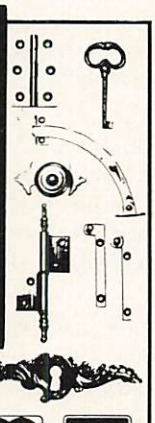

4320 W. Bell Drive
Las Vegas, NV 89118
871-0722
SEND $1.00 FOR CATALOG
MasterCard VISA

PARENTS!
Build strong bonds with your children through simple woodcraft experiences.
PLANS KITS SUPPLIES
CHILDSHOP
SEND $1.00 FOR OUR NEW CATALOG TO
DEPT. WJ-390 P.O. BOX 597, BURTON, OH. 44021
A Division of Choice Products

FULL SIZE WOODCRAFT PATTERNS
SIMPLE TO MAKE ★ FUN ★ PROFITABLE
☐ 200 pattern packet for scroll, band & jigsaws
☐ "Country Critters"-100 patterns, unique projects
☐ 6 enjoyable "Wind-Action" whirligigs
☐ "Country Classics" - best selling country projects
☐ 100 yard ornaments, animals, birds and more
☐ 17 "Show Stoppers" - craft show best sellers
Send $7.00 per packet or 3 FOR ONLY $14.00.
Fast Service • Satisfaction Guaranteed!
ACCENTS Dept. MJ30, Box 7387, Gonic, NH 03867
Catalog of 1000 patterns - $1.00 (Free with order)

HORTON BRASSES
Nooks Hill Road P. O. Box 120 WJ
Cromwell, CT 06416 (203) 635-4400
HORTON BRASSES are authentic copies of 17th, 18th, 19th & early 20th century pulls.

Mfrs. of Cabinet & Furniture Hardware for Homes & Antiques.
Send $3.00 for a Catalogue.

WOODWORKER'S CATALOG

There are over 4,000 money-saving reasons why woodworkers rely on Constantine.
4,000 woodwork items - to help Build - Restore - Repair - Refinish and win your family's applause! Over 200 different woods . . . 150 veneers . . . 500 plans . . . cabinet hardware . . . 96 How-To books . . . 118 carving tools and chisels . . . 76 inlay designs . . . and lots more for One-Stop, Right-Price shopping without leaving home!

CONSTANTINE Est.1812
2044R Eastchester Road
Bronx, NY 10461
Send 116 page catalog $1.00 enclosed

Name_____
Address_____
City_____ State_____ Zip_____

THE WOODWORKER'S MARKETPLACE

HOMECRAFT VENEER
DOMESTIC AND IMPORTED VENEERS
Over 140 varieties of Veneers. Complete Line of Tools for Veneering, Laminating and Marquetry.—Cements and Glues. Simplified Veneering Instructions and price list sent for $1.00. HOMECRAFT VENEER
901 West Way; Latrobe, Pa. 15650

TABLE STROKE SANDER
6 Models $595.00 — $695.00 BALL
Deluxe $750.00 — $1200.00 BEARING
Sand 38" x 6' & 8'
Sidestroke & String Sanders Available, Kits $45 to $570.
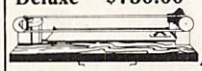
(Less Motor) F.O.B.
® McCall House, Box 1945-C
Lenoir, N.C. 28645 (704) 758-1991

WOODWORKING ASSOCIATION OF NORTH AMERICA
WANA
JOIN US
W.A.N.A.
35 Main St., Suite 6
Plymouth, NH 03264
(603)536-3876

CLASSIFIED

The Classified rate is $2.00 per word, payable with order. Minimum ad length is 15 words, and the deadline date is the 25th of the third month preceding the issue (4/25 for the July/August issue). Count each word and initial; phone number counts as one word; state and zip code count as one word. Send copy and check to ***The Woodworker's Journal****, Classified Department, P.O. Box 1629, New Milford, CT 06776.*

Build with spare parts and material. "Contour Double Drum Sander" drums measure 3¼" x 9" L. $5.00 U.S.; Adjustable "Table Saw Tenon Jig." $4.00 U.S.; Instructions, plans, material list included. J & J Ideas, P.O. Box 6864, Abilene, TX 79608. Texas residents add 8% sales tax. Outside U.S. add $2.00.

Authentic 100-year-old woodworking formulas for paints, varnishes, stains, and other "old-timey" solutions. Copies of original notes. Send $7.00 to Wood Solutions, Box 385, Saluda, NC 28773; (704)749-4331.

Log Cabin Dollhouse Plans. Great project. 1" - 1' standard scale. Adaptable to any log house. $5.00. Woodworking Unlimited, 261 Champlin Rd., Gilboa, NY 12076.

Yard Critter Patterns! Life-size plywood bear cub, woodchuck, fawn, raccoon, fox, skunks, rabbit, + more! $7.00 — Accents (FJ-30), Box 7387, Gonic, NH 03867.

Large selection of wood parts. Free catalog. K & K Woodcrafters, RD 4 Box 270A, Scotia, NY 12302.

Plans for a beautiful Chippendale wooden wall lantern measuring 20 x 6 x 6 inches. Finely detailed drawings, instructions, sources, costs. $15.50 postpaid, or send $1.00 (refundable) for brochure, to: Elements of Old Virginia, Box 767-WJ2, Williamsburg, VA 23187.

100 Full Size Woodcraft Patterns: Windmills, Bird Houses, Toys, etc. $4.50. Catalog alone 50c. Hayes Patterns, 6F Willow St., Woburn, MA 01801.

Woodentoy — patterns, project books, hardwood wheels, pegs, cargo, people and more. Send $1.00 for catalog; $4.00 for catalog plus 2 patterns; or free brochure. Woodentoy, Box 40344-WWJ, Grand Junction, CO 81504.

Carousel Horse Carving (1/3 standard size and smaller), Books, Blueprints. For order info, write to: Heritage Arts Press, 3315 Sacramento St., San Francisco, CA 94118.

Picture Frame Molding $.25/linear foot. Samples $1.00. C. Stander, FOB 932 Springmier Place, Pensacola, FL 32514.

"The Epoxy Handbook," step-by-step instructions on how to use epoxy for pictures, clocks, and plaques, plus much more. Send $7.95 to: Epoxy, Box 549A, Kezar Falls, ME 04047.

Door Harp Hardware — 50 tuning pins $15.00; 250 pins $52.50; 500 pins $80.00; 1000 pins $120.00. ¼ lb. No. 2 wire $8.00. Tuning pin wrench $5.00. All prices postpaid within the continental USA. Folkcraft Instruments, Box 807P, Winsted, CT 06098; (203) 379-9857.

Blueprints . . . 82 Classic Barns, Minibarns, Craftshops, Garages . . . Inexpensive! Catalog $5.00 (refundable). Ashland Barns, 990WJ Butlercreek, Ashland, OR 97520.

10 Country Kitchen and Wall Hanging Plans. Big sellers or ideal gifts. All 10 plans for $6.50. J.C. Enterprises, Dept. WP, 3549 Brookside Pkwy. S., Indianapolis, IN 46201.

Miniature Woodlathe Design. Ballbearing spindle. Straightforward construction uses common hardware, materials. Details $4.00. Don Sterchi, 2214 Lealand, Bowling Green, KY 42101.

Great Woodworking Software! Superb computerized index to 9 major woodworking magazines for IBM compatibles. Search, list, add, edit, print. Over 3300 references. Satisfaction guaranteed. $21.95. Infodex Services, Dept. 305, 10609 King Arthurs Ct., Richmond, VA 23235. Free Information.

Stainless steel and brass, screws and bolts. Small quantities, free catalog. Elwick, Dept. 762, 230 Woods Lane, Somerdale, NJ 08083.

Post Office Box Bronze Doors No. 1 $5.00, No. 2 $6.00, No. 3 $9.00 each. Add $1.00 each shipping. SASE: Hubbert Woodcrafts, P.O. Box 1415, Fletcher, NC 28732; (704) 687-0350.

Informative Catalog for woodworkers, woodcarvers, upholstery, antique restorers. Many unusual, hard-to-find items. Send $1.00 to Van Dyke's, Dept. 83, Woonsocket, SD 57385.

Selling your woodworking can be fun if you let others do the work. Let a veteran show you how. Refundable brochure $1.00. Grapevine Publications, 39 West Alexis, Suite 130-B, Toledo, OH 43612.

Chair Caning Supplies — cane webbing, rush, splint, ash, rawhide, cord. Catalog $1.00 (refundable). Caning Shop (WJ), 926 Gilman, Berkeley, CA 94710.

Use Your Scrap Wood. Make Shaker furniture miniatures. Book shows how. Free details/sample plan. RAI, (WJA), Box 586, Alpharetta, GA 30239-0586.

CLASSIFIED

Hardwood Lumber, kiln dried, large variety of species in several thicknesses and grades. We also carry basswood carving stock, curly and wormy maple, steam bending woods, flooring and paneling. No minimum order, size selection available. Call or send stamp for listing. Garreson Lumber, Dept. B, RD 3, Bath, NY 14810; (607) 566-8558.

Musical Instrument Kits — dulcimers, hammered dulcimers, banjos, mandolins, and more. Color brochure 56c stamp. Folkcraft Instruments, Box 807-K, Winsted, CT 06098; (203) 379-9857.

Let the Government finance your woodworking-related small business. Grants/loans to $500,000. Free recorded message: 707-449-8600. (KX9).

Spray-On Suede Lining. Finish any project with a soft touch. Free brochure, sample enclosed. DonJer Products, Ilene Court —Bldg. 8R, Bellemead, NJ 08502; (800) 336-6537.

Modular Storage System for shop, garage, or as furniture. Design for three sizes. $5.00 postpaid. Z.V. Enterprizes, Box 4977, Arcata, CA 95521.

"Good Wood" Pennsylvania Hardwoods. Over 2000 sizes 12 species. 1/8" to 2" thick. Surfaced, kiln dried. Small orders welcome. Free catalogue: Croffwood Mills, RD #1 Box 14J, Driftwood, PA 15832.

Woodworking Instructors & Head Maintenance, coed resident camp in Massachusetts. Contact Marv Lein, Camp Emerson, 5 Brassie Road, Eastchester, NY 10707; (914) 779-9406; (800) 955-CAMP.

DIY Plans for indoor/outdoor furniture, workbench, children's toys, rifle cabinet and more. Catalog $1.00. LLEWJ, Box 908, Cornville, AZ 86325.

Stop using your leftover scraps for firewood. Turn them into a profitable second income. Send $7.50 for exciting new kit to "Sawdust Magic," P.O. Box 315, Palmer Lake, CO 80133.

Yard Critter Patterns! Life-size plywood sheep, lamb, piglet, owl, chickens, ducks, geese, + more! $7.00 —Accents (EJ-30), Box 7387, Gonic, NH 03867.

My woodworking shop makes me $300 weekly, part-time, yours can too! Free details. Rick Gundaker, Dept. 19, 8042 Oliver Road, Erie, PA 16509.

Craft Supplies: Clock movements, components, plans, epoxy, foil and art prints, Shaker pegs, touch tones, door harp supplies, Bible clocks, videos, transfer art, stencils — over 1200 items! Wholesale catalog $3.00 (credited). Steebar, P.O. Box 463-E, Andover, NJ 07821-0463.

Hardwoods UPS — Red Oak, Walnut, Cherry, Hard Maple. Custom-made furniture panels, chair seat blanks. Send stamped envelope for prices. R & E Hardwoods, 212 Main, Garden City, MO 64747; (816) 862-8333.

Proven Furniture Plans: Octagon Gun Cabinet — Corner Curio; Pedestal Table — Curio. $10.00 each. John Hall, Rt. 4, Box 264-A, Hot Springs, AR 71913.

Free Illustrated Catalog of books for woodworkers: instructions, plans, scaled drawings, patterns for furniture, toys, house carpentry, duck decoy, bird and figure carving, chip carving, wood sculpture, lathe work, more. Most $4.00 to $6.00. Write Dover Publications, Dept. A158, 31 E. 2nd Street, Mineola, NY 11501.

Fine Woodworking Program. One year course in furniture and cabinet making, design and drafting, turning, carving, tool use, finishing, and more. Nationally Accredited. Financial aid available. Free brochure. Roberto-Venn School of Luthiery, 4011 S. 16th St., Phoenix, AZ 85040; (602) 243-1179.

Preservation Carpentry — one or two year course. Preserve and restore pre-20th century buildings. Cabinet & Furniture Making — two years, custom furniture construction. Traditional styles; hand joinery and embellishment. Piano Technology — two years. Tuning, action repairs, and rebuilding. Violin Making and Restoration — three years for making; optional fourth year for repair/restoration. Financial aid for qualified students. Accredited member NATTS. North Bennet Street School, Box W, 39 North Bennet Street, Boston, MA 02113; (617) 227-0155.

Wood Whirligigs. Full-size patterns, instructions. Wind-driven 13-22" bee, chipmunk, dog, coyote, roadrunner, cat, songbird, duck. $3.25 each; any four $12.00; all eight $23.00. W. Skov, 3380 So. 4th Ave., #26, Yuma, AZ 85365.

Real Scroll Saw Patterns — not for bandsaws. Seven turn-of-century antique cars — Chevrolet, Ford, Buick, etc. Full sized. Unique, very detailed. $7.00. Memory Lane, 5367-C East Mountain Street (J-3). Stone Mountain, GA 30083.

Dulcimer Builder Supplies, Precision milled and fine sanded dulcimer and hammered dulcimer woods. Cherry, walnut, paduk, rosewood, birdseye, and curly maple, Sitka spruce, W.R. cedar; related hardware, strings and accessories. 65c stamp for brochure. Folkcraft Instruments, Box 807-W, Winsted, CT 06098; (203) 379-9857.

Casino Table Kits, regulation size, blackjack, craps, roulette tables. CR, Box 1686, Las Vegas, NV 89101.

300+ Plans — Build shop machines and accessories. Catalog $1.00 refundable. Wood-Met (WJ), 3314 Shoff, Peoria, IL 61604.

Custom Turning — Have turnings made to your exact specifications. Furniture reproduction, porch railings and stairway balusters a specialty. For free brochure send to: River Bend Turnings, Box 364, Dept. WJ, RD #1, River Road, Wellsville, NY 14895.

$150 Daily Woodworking. Unusual, easy, proven, enjoyable. Send stamp. Pine Shop, 897-3 Mammoth, Manchester, NH 03104.

Make Wooden Toys, whirligigs, doll houses, clocks, music boxes, weather instruments, crafts, furniture with our plans, parts, kits, books, supplies — Catalog $1.00 — (614) 484-4363 — Cherry Tree Toys, Belmont, OH 43718-0369.

Full-Size Professional Plans — Catalog $3.00. Over 200 professionally designed plans for building fine furniture. Furniture Designs, Inc., CJ-30, 1827 Elmdale Ave., Glenview, IL 60025.

BACK ISSUES

To order back issues use the form bound in the center of this issue.

Cradle
M/J '85

Vol. 8 No. 3 May-June '84

Country Vegetable Bin, Folding Deck Chair, Shaker Pedestal Table, Wall Hung Display Cabinets, Wooden Coat Hanger, Toy Car and Trailer, Paper Towel Holder, Carved Hand-Mirror, Writing Desk, Carved Walking Stick, Laminated Clock, Oak and Glass End Table, *Articles:* How to Lay Out and Make Circular Cuts; Mail Order Selling; Stripping Old Finishes; Carving the Ball-and-Claw Foot.

Vol. 8 No. 4 July-Aug '84

Wag-on-Wall Clock, Oak Swing, Candy Dispenser, Coffee and End Tables, Tugboat and Barge, Lazy Susan, Early American Mirror, Colonial Pipe Box, Sewing Machine Cabinet, Cam Clamp, Hamper, *Articles:* What Sells Best?; Homemade Removers; Buying a Basic Set of Hand Tools; Kerf Bending; Caning and Wood Finishing Suppliers.

Vol. 8 No. 5 Sept-Oct '84

Not Available

Vol. 8 No. 6 Nov-Dec '84

Stickley Chair, Tool Cabinet, Shaker Sewing Stand, Lighted Display Pedestal, Teardrop Clock, Pierced Tin Cabinet, Toy Hook and Ladder Fire Truck, Busy Bee Toy, Colonial Doll House, Kitchen Organizer, Wine Server, Grandfather Clock: Part II (Part I available by request), *Articles:* Starting a Business: Part II; Applying the Final Finish; The Fundamentals of Wood; Inlays and Inserts; Gustav Stickley and American Mission Furniture.

Vol. 9 No. 1 Jan-Feb '85

Early American Step Table, Oak Barrister's Bookcase, Parquet Table, Shaker Trestle Table, Bandsawn Wooden Scoops, Toy Biplane, Book Ends, Contemporary Candle Holders, Necktie and Belt Holder, Keyed Miter Jig, Modular Coffee Table and Bar, Magazine and Book Rack, Contemporary Chest of Drawers, *Articles:* Toys and Children's Articles: An Outline of The Consumer Product Safety Commission Standards; Shellac; Truing and Squaring Lumber; The Fingerjoint Spline; Furniture Kit Suppliers; The Shakers; *Special Section:* Back Issue Index.

Vol. 9 No. 2 Mar-Apr '85

Queen Anne Lowboy, Television/VCR Stand, Early American Pine Corner Cupboard, Toy Tool Set, Windspinner, Woodchopper Whirligig, Chinese Puzzle, Cut-Off Jig, Blanket Chest, Shaker Harvest Table, Blacksmith's Tool Tray, *Articles:* A Guide to Photographing Your Work; Applying Shellac and Lacquer; Sharpening Plane Blades and Chisels; Installing Machine Woven Cane; American Queen Anne, 1715-1755; General Woodworking Suppliers.

Vol. 9 No. 3 May-June '85

Jacobean Joint Stool, Wall Cabinet with Recessed Finger Pulls, Shaker Desk, Kitchen Cart, Contemporary Wall Clock, Colonial Wall Sconce, Card Box, Towel Bar with Glass Shelf, Marble Race Toy, Cradle, Vanity Mirror, Miter Clamping Jig, *Articles:* Product Liability: Part I; Restoring an Antique Mirror Frame; Coping with Wood Movement; Making Recessed Finger Pulls; The Jacobean Period.

Vol. 9 No. 4 July-Aug '85

Gate-Leg Table, Computer Desk, Shaving Horse, Stamp Dispenser, Crumb Collecting Breadboard, Toy Trucks, Early American Wall Shelf, Pivot-Top Game/Coffee Table, Settle Bench, Shaker Single-Drawer Cupboard, Fold-up Workbench, *Articles:* Product Liability: Part II; Spray Finishing; Table Saw Basics; Making the Rule Joint; The William and Mary Period; Caning and Wood Finishing Suppliers.

Vol. 9 No. 5 Sept-Oct '85

Colonial Schoolmaster's Desk, Contemporary Sideboard, Mahogany End Table, Victorian Hall Tree, Cutlery Wall Cabinet, Swing-out Plant Hanger, Prancing Horse Silhouette, Block Puzzle, Iron Caddy, Toy Ironing Board, Early American Water Bench, Wooden Smooth Plane, Shaker Sewing Box, *Articles:* A Craft Fair Visit; How to Use Stick Shellac; A Guide to Circular Saw Blades; Making Bent Laminations; Country Colonial Furniture.

Vol. 9 No. 6 Nov-Dec '85

Moravian Chair, Dulcimer, Oak Dining Table, Shaker Washstand, Marking Gauge, Veneered Wall Clock, 4 x 4 Off-Roader, Teddy Bear Puzzle, Duck Pull-Toy, Landscape Cutting Boards, Early American Tall Clock, Pine Desk Organizer, *Articles:* Secrets of Success; Weaving a Fiber Rush Seat, Part I; Table Saw Ripping Problems and Their Solutions; 4-Piece Book Match Veneering; Pennsylvania Dutch Furniture.

Vol. 10 No. 1 Jan-Feb '86

Freestanding Shelf System, Chippendale Bachelor's Chest, Oriental Serving Tray, Country Bench, Antique Knife Tray, Tape Dispenser, Valentine Box, Toy Tow Truck & Car, Shaker Drop-Leaf Table, Shop-Made Bow Saw, Child's Settle Bench, Plate Shelves, *Articles:* On Getting Paid for Your Work; Weaving a Fiber Rush Seat, Part II; Table Saw Crosscutting: Techniques & Tips; Router-Lathe Fluting: A Shop-Made Approach; Chippendale Furniture; *Special Section:* Back Issue Index.

Vol. 10 No. 2 Mar-Apr '86

Not Available

Vol. 10 No. 3 May-June '86

Victorian Whatnot Shelf, Contemporary Lamp, Early American Bench, Steam-Bent Clock, Pine Hutch/Cupboard, Canada Goose Basket, Toy Crane, Condiment Holder, Shop Workstation, Parsons Table, Shaker Lap Desk, *Articles:* An Interview with Toymaker Clare Maginley; How to Flatten a Warped Board; A Guide for Choosing Your First Router; Supported Steam Bending; Victorian Period.

Vol. 10 No. 4 July-Aug '86

Shaker Slat-Back Side Chair, Wall-Hung Display Cabinet;, Latticework Planter, Country Bucket Bench, Adirondack Chair, Coffee Mill, Clamdigger's Basket, Box of Shapes Toy, Disk Clock, Tenon Jig, Dictionary Stand, *Articles:* Selecting the Right Project for Production; More About Warped Boards; All About Router Bits; The Sliding Dovetail Joint; Furniture Kits Suppliers.

Vol. 10 No. 5 Sept-Oct '86

Desk with Tambour Top, Vanity Case, Stool, Coffee Table, Blanket Chest, Mortar and Pestle, Whale Folk Art Silhouette, Toy Wagon, Cranberry Rake, Router Bit Box, Shaker Drop-Leaf Table, *Articles:* Are Your Prices Competitive?; Restoring a Rosewood Chair; Basic Router Operations; Making Tambour Doors; General Woodworking Suppliers.

Vol. 10 No. 6 Nov-Dec '86

Early American Hamper, Cube Table, Rabbit Pull Toy, Old-Time Sled Wall Shelf, Cassette Tape Holder, Dog/Cat Bed, Vanity Mirror, Early American Washstand, Router Table, Victorian Sleigh, *Articles:* Wholesale and Discount Sources of Supply; Sandpaper Abrasives; Using the Router Table; The Mitered Bead Frame and Panel; Clock Parts Suppliers.

Vol. 11 No. 1 Jan-Feb '87

Shaker Blanket Chest, Glass-Top Dining Table, Dovetailed Stool, Jewelry Box, Door Harp, Toy Firetruck, Canada Goose Mobile, Balancing Sawyer Folk Toy, Early American Style End Table, Jointer Push Board, *Articles:* Direct Mail Promotions — Defining the Market for Your Work; Old Wood; The Mortise and Tenon, Part I; Combination Hand/Router Dovetailing; *Special Section:* Back Issue Index.

Vol. 11 No. 2 Mar-Apr '87

Shaker Sewing Desk, Garden Bench and Table, Mirrored Wall Shelf, Rhombohedron Puzzle, Wood Sawyer Whirligig, Folk Art Door Stop, Kangaroo Pull Toy, Colonial Pine Wall Shelf, Contemporary Hall Table, *Articles:* How to Create a Direct Mail Promotion; Types of Finish — An Overview; The Mortise and Tenon, Part II; Making Bevel-Edged Drawer Bottoms.

Vol. 11 No. 3 May-June '87

Display Pedestal, Kitchen Canister Set, Riding Biplane, Contemporary Serving Cart, Napkin Holder, Decorative Planter, Country Vegetable Bin, Pine Medicine Cabinet, Shop Drum Sander, Vienna Regulator Clock, *Articles:* Penetrating Oils and How to Use Them; The Jointer; Veneer, Part I; Decorative Joinery: Dovetail Key Butt-Miter; Caning and Wood Finishing Suppliers.

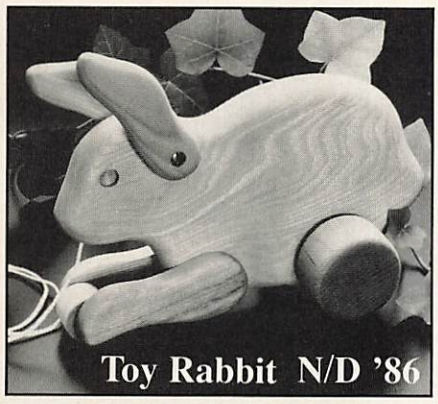

Toy Rabbit N/D '86

Vol. 11 No. 4 July-Aug '87

TV/VCR Cabinet, Early American Style Bookcase, Pine Trash Container, Sturdy Low-Cost Workbench, Country Basket, Desk Calendar with Pen & Pencil, Butterfly Pull Toy, Vanity Mirror with Drawer, Apothecary Chest, *Articles:* Shellac; The Hand Plane; Veneer, Part II; Incised Carving; Hardwoods Suppliers.

Vol. 11 No. 5 Sept-Oct '87

Pine Woodbox, Contemporary Love Seat, Two-Drawer Oak Platform Bed, Snail Pull Toy, Routed Trivets, Spice Rack with Chip Carving, Joiner's Tool Chest, Shaker-Style Step Stool, Turned Shop Mallets, *Articles:* French Polishing Made Easy; Plane Iron Sharpening; Making a Splayed Leg Drill Guideblock; Traditional Chip Carving; Shop-Tested: 12 Jigsaws.

Vol. 11 No. 6 Nov-Dec '87

Curio Cabinet, Rocking Horse, Three-Drawer Jewelry Chest, Tapering Jig, Rolling Toy, Folk Art Silhouette, Two Towel Racks, Early American Style Wall Shelf, Corner Cupboard, Stacking Wine Racks, *Articles:* On Glues and Gluing; Band Saw Setup; Making the Continuous Bracket Foot; Step-By-Step To a Flawless Finish On Pine (Or Any Other Wood); Hardware Suppliers.

Vol. 12 No. 1 Jan-Feb '88

Early American Pierced Tin Cabinet, Contemporary Coffee Table, Puss 'n Books Bookends, Cookbook Holder, Wooden Jewelry, Child's Duck Puzzle, Shaker Wall Clock, Stereo Cabinet and Speakers, Country Occasional Table, Drill Press Jig, *Articles:* Edge-Gluing; The Drill Press; Pierced Tin; Four Shopmade Finishes; General Woodworking Suppliers.

Vol. 12 No. 2 Mar-Apr '88

Folk Harp, Oak & Glass Tier Table, Crystal Regulator Clock, Early American Candlesticks, Arrow Wall Decoration, Three-Drawer Country Wall Box, Key Cabinet, Contemporary Box, Shaker Carrier, *Articles:* Use and Sharpening of the Hand Scraper; The Lathe: Basic Setup; Quartered Turnings; Lacquer; Stationary Tool Suppliers.

Vol. 12 No. 3 May-June '88

Hunt Table, Loon Carving, Early American Dry Sink, Contemporary Dresser, Old-Time Pipe Box, Antique Knife & Fork Tray, Dutch Tulip Folk-Art Silhouette, Colonial Salt Box, Bud Vase, Miter Gauge Stop, *Articles:* Spindle Turning; Selecting and Sharpening Lathe Tools; Recessed Finger Pull Step-By-Step; Types of Stain; Clock Parts Suppliers.

Vol. 12 No. 4 July-Aug '88

Four-Drawer Lamp, Oak Magazine Rack, Occasional Table, Mitered-Corner Box, Heart Stool, Decorative Cutting Boards, Kids' Piggy Bank, Turned Bowl, Country Cupboard, *Articles:* Faceplate Turning; Workshop Layout; Cutting Dovetails on the Table Saw; Staining Basics; Schools and Craft Centers.

Vol. 12 No. 5 Sept-Oct '88

Oak Bookcase Desk, Miter Cutting Jig, Captain's Clock, Country Coffee Table, Rooster Folk-Art Silhouette, Harvest Basket, Bird Push Toy, Pencil Post Nightstand, 18th-Century Pencil Post Bed, *Articles:* Why Worry About Wood Movement?; Joining Ring Segments; Drill Bits and Boring: The Hole Story; Filling Open-Grained Woods; Hardwood Suppliers.

Vol. 12 No. 6 Nov-Dec '88

Child's Carousel Lamp, Shaker High Chest, Table Saw Crosscut Box, Country Vegetable Bin, Whale Pull Toy, Colonial Wall Sconce, Treetop Christmas Ornament, Classic Pickup Truck, Contemporary Cradle, *Articles:* Flattening Wide Surfaces with the Hand Plane; Making a Cove-Edged Raised Panel: Core-Box Bit Method; Polyurethane; A Sander For Large Surfaces; Caning and Wood Finishing Suppliers.

Vol. 13 No. 1 Jan-Feb '89

Shaker Wall Cabinet, Shop-Built Disk Sander, Cherry Table, Pine Wall Clock, Rock and Roll Toy, Contemporary Candlesticks, Merganser Decoy, Child's Table and Chairs, *Articles:* Buying Hardwood Lumber: What You Need to Know; The Thickness Planer; Making Breadboard Ends; Ebonizing; Hardware Suppliers; *Special Section:* Back Issue Index.

Vol. 13 No. 2 Mar-Apr '89

Oriental Mirror, Adirondack Settee, Country Village, 18th-Century Tilt-Top Table, Toy Fishing Trawler, Two Trivets, Folk-Art Cow, Greek Revival Birdhouse, Pine Armoire, *Articles:* Transferring and Enlarging Patterns; Making Tripod Legs; Three Easy Finishes for Pine; The Portable Circular Saw; Schools and Craft Centers.

Vol. 13 No. 3 May-June '89

Jewelry Chest, Storage Seats, Table Saw Gauge, Oval Extension Table, Nessie Pull Toy, Back Massager, Decorative Wall Key, Country Wall Shelf, Contemporary Mirror, *Articles:* Panel Retainer Disk System; Understanding Circular Saw Blades; Cutting Box Joints; Non-Toxic Finishes; Massachusetts Woodworker Paula Garbarino; General Woodworking Suppliers.

Vol. 13 No. 4 July-Aug '89

Country Pie Safe, Shaker Long Bench, Folk-Art Sign, Toy Farm Tractor and Wagon, Miniature Flower Cart, Kitchen Tongs, Pine Wall Cabinet with Tinsel Art, Stacking Bookshelves, *Articles:* Dealing with Uneven Wood; Tinsel Art; Coping with Your Radial-Arm Saw; Brushing Lacquer; Tools on Display: A Visit to a Woodworking Show; Stationary Equipment Suppliers.

Vol. 13 No. 5 Sept-Oct '89

Oak Globe Stand, Country Bake-Room Table, Chippendale Small Chest, Stacking Desk Trays, Pencil Box, Apple Doorstop, Space Shuttle Toy, Marquetry Coasters, Ice Chest with Marbleized Top, *Articles:* The Table Saw: Basic Adjustments; Cutting Full-Blind Dovetails; Marquetry: The Pad Method; Marbleizing: Creating a Faux-Marble Finish on Wood; Mount Lebanon Shaker Village: A Museum in the Making; Tool Review: Shop Test: Four Portable Planers; Clock Parts Suppliers.

Vol. 13 No. 6 Nov-Dec '89

Bed-and-Breakfast Tray, Mission Style Trestle Table, Jewelry Box, Kids' Bobsled, St. Nicklaus Carving, Carousel Toy, Box Drum, Dancing Man Folk Toy, One-Board Towel Rack, Secretary Desk, *Articles:* Mortising Butt Hinges; Dado Heads; Marquetry: The Empty Window Method; Aniline Dyes; Lynes Unlimited: Making Toys in a Kansas Chicken Coop; Hardwood Suppliers.

Vol. 14 No. 1 Jan-Feb '90

Tavern Table, Mortise & Tenon Mirror, Weaver's Chest of Drawers, Tissue Box Cover, Band-Sawn Napkin Holder, Grasshopper Pull Toy, Compact Disc Holder, Shop-Built Spindle Sander, Wall-Hung Ironing Board, *Articles:* Clamps: One Shop Tool You Can't Do Without; How to Hang Wall Cabinets; Marquetry: The Direct Method; Protecting a New Finish: A Guide to Waxes and Polishes; Caning and Finishing Suppliers; Special Section: Back Issue Index.

Country Pie Safe J/A '89

Shop Tips

I've found that a little rubber cement can be a great help on those occasions when you need to start a nut in a hard-to-reach location. Simply place a little of the cement on the end of your finger and also on one face of the nut.

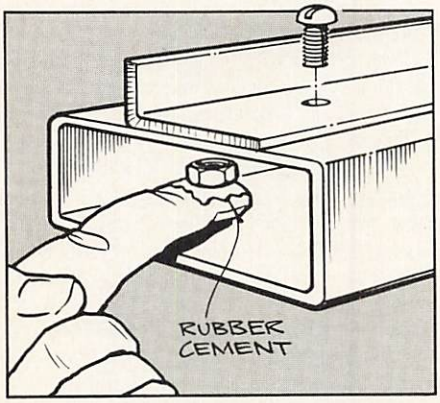

After drying for a few seconds, the nut can be stuck to the glue on your finger. The nut will hold firmly in place, allowing you to get it into that difficult spot, yet it will pull off with little difficulty. Once the nut is in place, the rubber cement will easily rub off your finger. The manufacturer's label says to avoid frequent or prolonged skin contact with rubber cement, so you don't want to use this tip every day.

Howard E. Moody, Upper Jay, N.Y.

Ordinary household ammonia will quickly dissolve the pitch that accumulates on saw blades. Let the blade soak for a few minutes, then scrub the pitch with an old toothbrush. This works almost as well as oven cleaner, yet it's a lot cheaper.

Even a very small blob of dried glue on the flat of a try square will cause inaccuracy. Make a point to periodically inspect your square and, if necessary, remove any glue spots you find.

My garage workshop is crowded with woodworking equipment, much of it with odd protrusions such as handles, adjustment levers, or table saw extension bars. These things are easy to bang into, often with painful results. To

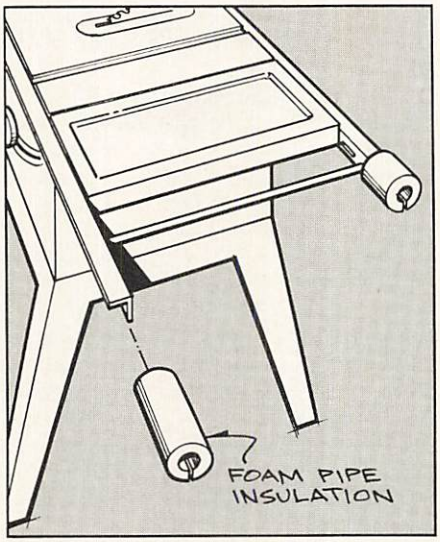

reduce the problem, I cover these dangerous projections with foam water pipe insulation, the kind that's sold at just about any hardware store. I simply cut the insulation to length (allow a couple of inches for a cushion) and slip it on the projecting part. It's an easy way to make the shop a safer place to work.

Allan Zolnekoff, Whittier, Calif.

Light-Duty Clamps

Don't overlook the lowly spring clothespin when you need a light duty clamp. The wooden jaws can be shaped to fit a particular job, which make it especially handy for model work.

James A. Hunter, Traverse City, Mich.

A common bobby pin makes an excellent clamp when working on models or other small jobs. There is enough tension to hold the parts together and the rubber tips help prevent fine work from getting marred.

Howard E. Moody, Upper Jay, N.Y.

A hemostat, used by surgeons to clamp blood vessels, makes an excellent light-duty woodworking clamp. It's also handy for holding or retrieving small parts in hard-to-reach places. They

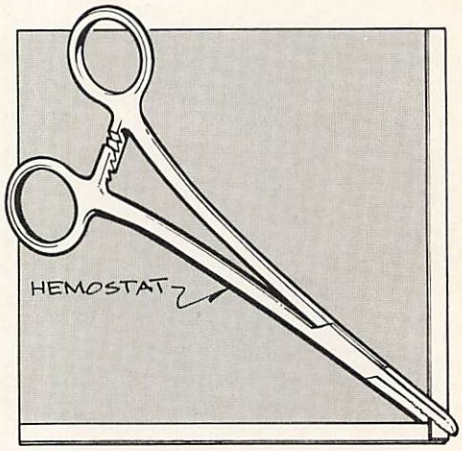

come in straight or curved versions and sell for around $5.00. If not available at your local pharmacy, try a medical supply shop or a store that sells nurses' uniforms and supplies.

***The Woodworker's Journal** pays $25 for reader-submitted shop tips that are published. Send your ideas (including sketch if necessary) to: **The Woodworker's Journal**, P.O. Box 1629, New Milford, CT 06776, Attention: Shop Tip Editor. We redraw all sketches, so they need only be clear and complete. If you would like the material returned, please include a self-addressed stamped envelope.*

INDEX TO ADVERTISERS

Accents 61
Accuset 7
American Woodcrafters 61
Brown Wood Products 61
Cascade Tool 15
Childshop 61
Constantine 61
Dollar Trading 6
Econ Abrasives 10
Foley-Belsaw 11
Furniture Designs 61
Grizzly Imports 4
Homecraft Veneer 62
Horton Brasses 61
Imported European Hardware . . 61
Jennings Products 61
Jesse Jones 19
K & S Specialty Lumber 14
McCall House 62
Meisel Hardware 9
Minuteman 61
MLCS 5, 10
Nova Tool 14
Penn State 2
Singley 61
Sprayway 7
Trend-Lines 11
Turn-O-Carve 61
Winfield Collection 14
Woodmaster Tools 9
Wood-Mizer 11
Woodworking Shows 9

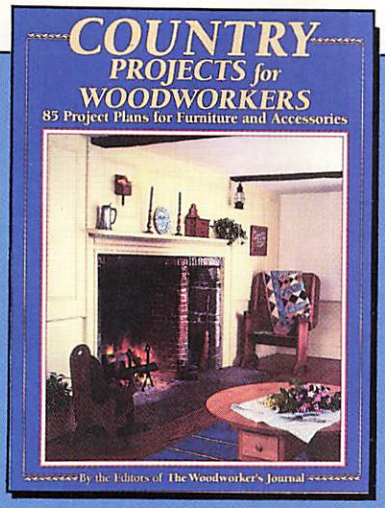

Country Projects For Woodworkers

If building the simple, sturdy furniture of the old cabinetmakers appeals to you, then you'll want this collection of the best country projects from the 1980-84 issues of *The Woodworker's Journal*. 85 complete plans range from weekend projects like Colonial Candlesticks and Fireplace Bellows to more challenging projects such as a Shaker Chest of Drawers, a Stepped-Back Hutch, and an 18th Century Trestle Table. Some plans are also found in *Projects for Woodworkers,* Volumes 1 and 2.

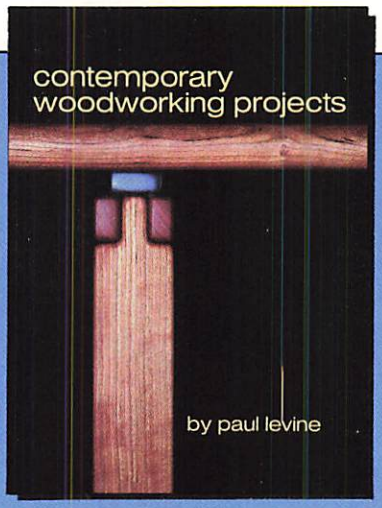

Contemporary Woodworking Projects

Paul Levine guides woodworkers of all skill levels through room-by-room chapters of coordinated furniture and accessories. The clean angles, sturdy joinery and special techniques are made easy to master with step-by-step instructions and illustrations. Among the 40 handsome projects are a matching Love Seat, Chair and Ottoman set, an Oak Credenza, a Platform Bed, and a Japanese Shoji Lamp. Children will enjoy their own table and chair set, puzzles and a great box of dominoes.

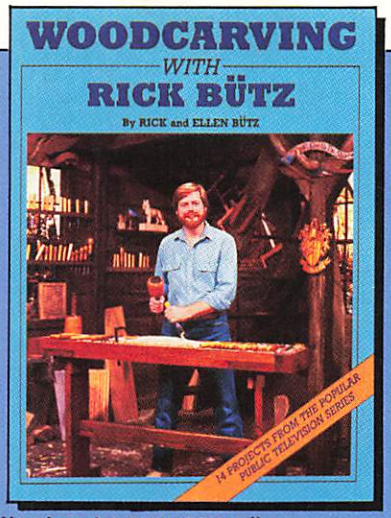

Woodcarving With Rick Bütz

Learn woodcarving! With just a few tools and a few hours to spare, you can share in the simple pleasures of carving. Wander into the Black Forest of Germany with a traditional carving of St. Nick, or into a small Russian village with a Dancing Bears folk toy. You'll enjoy a chip-carved Quilt Rack, wildlife carvings, and a Tobacconist's Indian. All 14 projects are fully detailed with step-by-step photos. There are also chapters on tool selection, sharpening, whittling, chip and relief carving.

BOOKS FROM The Woodworker's Journal

You'll find the order form for these books bound in the center of this issue.

Projects For Woodworkers, Volume 1

Beginning and advanced woodworkers alike will appreciate the full range of styles in furniture, accessories, lamps, clocks, toys and gifts. Of the 75 projects selected from the 1980-81 issues of *The Woodworker's Journal,* plans include a Cabinetmaker's Workbench, Pine Shaker Cupboard, Old-time Icebox, a Cobbler's Bench Coffee Table and a Child's Victorian Sled. Fully detailed instructions, illustrations, and photos.

Projects For Woodworkers, Volume 2

Originally published in the 1982 issues of *The Woodworker's Journal,* all 60 projects were chosen with a wide variety of styles and skill levels in mind. Each project is presented with complete instructions and thorough illustrations. You'll find household accessories like the Desk Caddy, Casserole Dish Holder, and Breakfast Tray easy to build. And you're sure to enjoy the reward of completing more involved projects like the Tambour Desk, Old Danish Chest of Drawers and Swinging Cradle.

101 Projects For Woodworkers

For the eager amateur just starting out or the craftsman with a shop full of tools, **101 Projects For Woodworkers** features an unparalleled variety of classic projects for everyone. Included in this collection of plans from the 1977-80 issues of *The Woodworker's Journal* are a classic Rolltop Desk, an old-fashioned Porch Swing, traditional and contemporary furniture, clocks, mirrors, home accessories, toys and novelties. Complete instructions and illustrations.

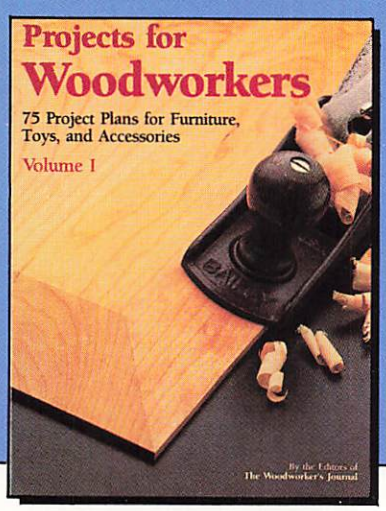

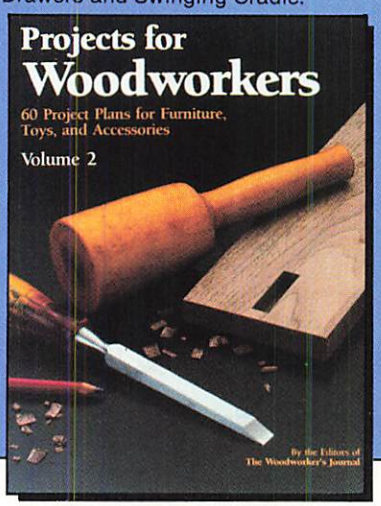

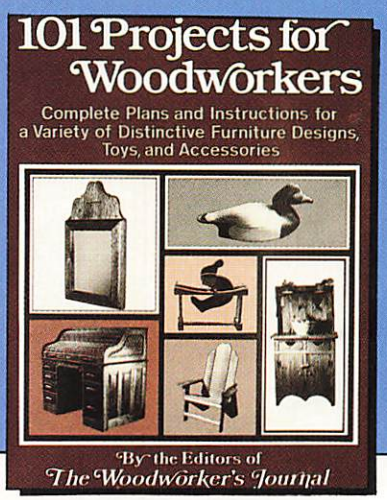

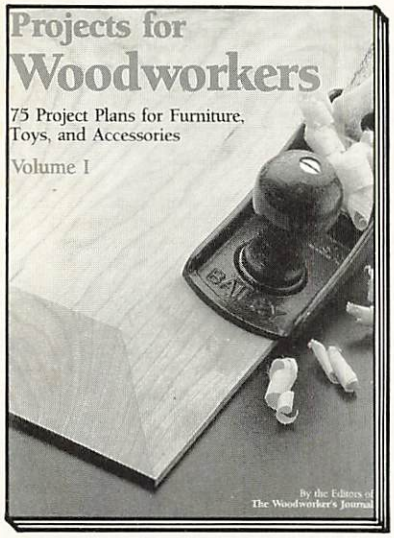
Projects for
Woodworkers
75 Project Plans for Furniture, Toys, and Accessories
Volume I
By the Editors of The Woodworker's Journal

75 Complete Project Plans

Projects for Woodworkers, Volume 1

Whether you prefer fine antique reproductions, handsome contemporary design, long-term projects, or those easily completed in an evening, **Projects For Woodworkers, Volume 1** has something for everyone. You'll find the best of styles in furniture, clocks, household accessories, toys, and games.

For more information on this and other books from ***The Woodworker's Journal***, see page 67. To order use the handy order form bound in the center of this issue.

Multipurpose Cabinet

Toy Truck

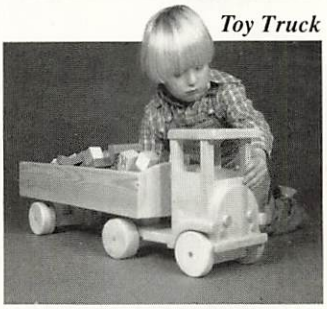

Workbench

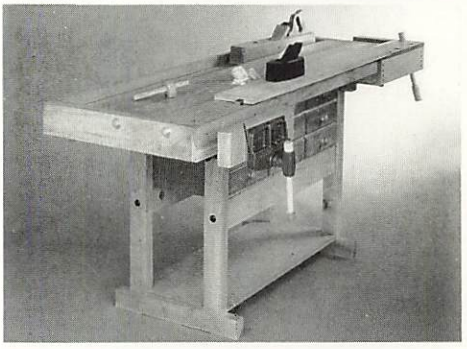

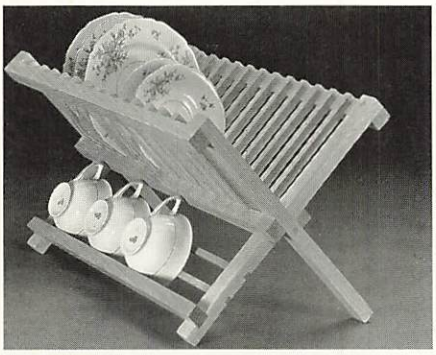

Dish Rack

Ice Box

Next Issue . . .

We've got lots more great projects. Here's just a few.

The Shaker Tall Clock will add timely elegance to your front hall, the Child's Cupboard will spice up a play room, and the push toy will keep the family toymaker happy.

Child's Cupboard

Cat Push Toy

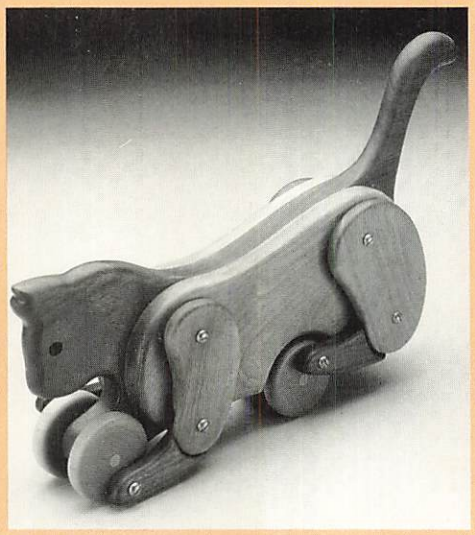

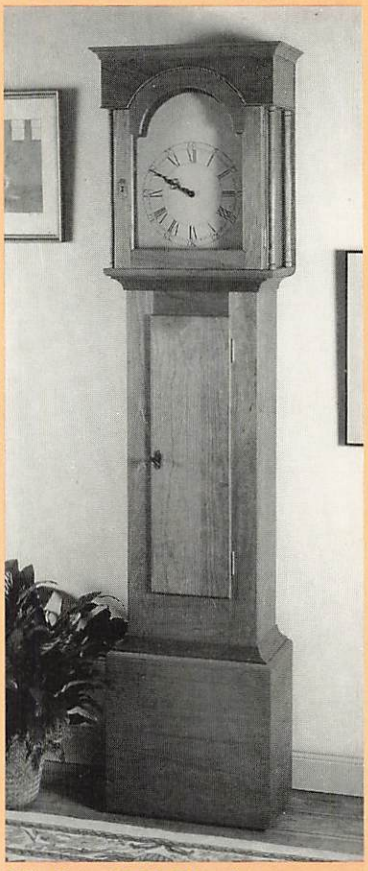

Shaker Tall Clock